Leuze electronic

the sensor people

SOLID-4

Safety Light Curtain

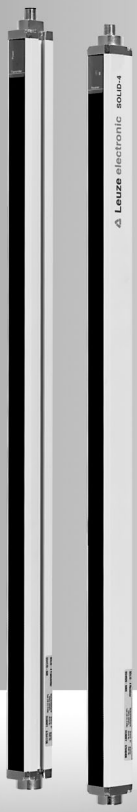

604049 - 2011/02
Subject to change
without prior notice

CONNECTING AND OPERATING INSTRUCTIONS

Original Instructions

Notes on Connecting and Operating Instructions

This connecting and operating instructions manual contains information on the proper use of SOLID-4 Safety Light Curtains in accordance with its intended purpose. It is included with delivery.

All the information contained herein, in particular the safety notes, must be carefully observed.

This connecting and operating instructions manual must be stored carefully. It must be available for the entire operating time of the optical safety device.

Notes regarding safety and warnings are identified with the symbol.

Notes regarding important pieces of information are identified with the symbol.

Leuze electronic GmbH + Co. KG is not liable for damage resulting from improper use of its equipment. Familiarity with these instructions is an element of the knowledge required for proper use.

© Reprints and reproduction, in whole or in part, are permitted only with the explicit permission of

Leuze electronic GmbH + Co. KG
In der Braike 1
D-73277 Owen - Teck / Germany
Phone+49 (0) 7021 / 573-0
Fax +49 (0) 7021 / 573-199
info@leuze.de
www.leuze.com

1 General ... 6
1.1 Certifications ... 6
1.2 Symbols and terms ... 7
1.3 SOLID-4 selection ... 9

2 Safety ... 10
2.1 Approved purpose and foreseeable improper operation ... 10
2.1.1 Proper use ... 10
2.1.2 Foreseeable misuse ... 11
2.2 Competent personnel ... 12
2.3 Responsibility for safety ... 12
2.4 Exemption of liability ... 12
2.5 SOLID-4 Safety Light Curtains with a resolution of 14 mm to 40 mm ... 13
2.6 SOLID-4 Safety Light Curtains with a resolution of ≥ 40 mm ... 13
2.7 Additional safety instructions for access guarding with SOLID-4 ... 14

3 System setup and possible uses ... 15
3.1 The opto-electronic protective device ... 15
3.2 Cascading option ... 16

4 Functions ... 18
4.1 Selectable functions of the SD4T Transmitter ... 18
4.1.1 Transmission channel ... 18
4.2 Selectable functions of the SD4R-E Receiver ... 18
4.2.1 Transmission channel ... 18
4.2.2 Start/restart interlock (RES) ... 19
4.2.3 Contactor monitoring (EDM) ... 20
4.3 Functions of receiver SD4R ... 21
4.4 Diagnostics function: Dirt and error signal output ... 21
4.5 Test input ... 21

5 Display elements ... 22
5.1 SD4T Transmitter status displays ... 22
5.2 SD4R-E Receiver status displays ... 23
5.2.1 7-segment displays ... 23
5.2.2 LED displays ... 24
5.3 SD4R Receiver status displays ... 24
5.3.1 7-segment display ... 25
5.3.2 LED displays ... 25

6 Installation ... 26
6.1 Calculating minimum distances ... 26
6.1.1 Safety distance for point of operation guarding ... 26
6.1.2 Safety distance for danger zone guarding ... 28
6.1.3 Safety distance and beam heights for Safety Light Curtains as access guarding ... 30
6.1.4 Minimum distance from reflective surfaces ... 32
6.2 Mounting notes ... 33
6.3 Mechanical mounting ... 34
6.4 Mounting types ... 35
6.4.1 Standard mounting ... 35
6.4.2 Option: Mounting with swiveling brackets ... 35
6.4.3 Option: Side mounting ... 36

7 Electrical connection ... 37
7.1 M12 coupling ... 37
7.1.1 Transmitter ... 37
7.1.2 Receiver SD4R-E ... 38
7.1.3 Receiver SD4R ... 41
7.2 Connection examples ... 42
7.2.1 Connection example for transmission channel 1(TC1) ... 42
7.2.2 Connection example for transmission channel 2 (TC2) ... 43
7.2.3 SOLID-4 connection example with downstream relay module, MSI-RM2 ... 44
7.2.4 Connection example of SOLID-4 with downstream MSI-SR4 Safety Interface Device ... 45

8 Startup ... 46
8.1 Switching on ... 46
8.1.1 Display sequence with SD4T Transmitter ... 46
8.1.2 Display sequence with SD4R-E Receiver ... 47
8.1.3 Display sequence on receiver SD4R ... 48
8.2 Aligning transmitter and receiver ... 48
8.2.1 Optimizing alignment by turning and/or tilting the transmitter and receiver ... 48

9 Testing ... 49
9.1 Testing before first startup ... 49
9.2 Regular tests ... 49
9.3 Daily testing with the test rod ... 49
9.4 Cleaning the front screens ... 51

10 Troubleshooting ... 52
10.1 What do I do if an error occurs? ... 52
10.2 Diagnostics ... 52
10.2.1 SD4T Transmitter diagnostic ... 52
10.2.2 SD4R-E Receiver diagnostics ... 52
10.3 AutoReset ... 54

11 Technical data ... 55
11.1 General data ... 55
11.1.1 Protective field data ... 55
11.1.2 Safety-relevant technical data ... 55
11.1.3 General system data ... 55
11.1.4 SD4T Transmitter signal input ... 56
11.1.5 SD4R-E Receiver signal inputs/outputs ... 56
11.1.6 Safety-related transistor outputs ... 57
11.2 Safety Light Curtain/host dimensions, weights, response times ... 58
11.3 Safety Light Curtain/guest dimensions, weights, response times ... 59
11.4 Number of beams for host / guest devices ... 59
11.5 Bracket dimensions ... 61

12 Appendix ... 63
12.1 SOLID-4 scope of delivery ... 63
12.2 SOLID-4 ordering information ... 63
12.2.1 SOLID-4E Host ordering information ... 65
12.2.2 SOLID-4 Guest ordering information ... 66
12.3 SOLID-4 accessories ordering information ... 67
12.4 Checklists ... 69
12.4.1 Checklist for point of operation guarding ... 70
12.4.2 Checklist for danger zone guarding ... 71
12.4.3 Checklist for access guarding ... 72
12.5 EC Declaration of Conformity ... 73

1 General

SOLID-4 Safety Light Curtains are type 4 Active Opto-electronic Protective Devices (**A**ctive **O**pto-electronic **P**rotective **D**evices, AOPDs) in accordance with EN IEC 61496-1 and prEN/IEC 61496-2.

All SOLID-4 Safety Light Curtains with a type SD4R-E Receiver have start/restart interlock and contactor monitoring function that can be selected and deselected, as well as display elements (LEDs and 7-segment) for convenient startup and diagnostics.

The SOLID-4 series is equipped with 2 OSSDs (transistor safety-related switching outputs) with M12 connection system as standard features.

To provide the best possible solutions for specific applications, SOLID-4 series devices are available in various resolutions and protective field heights.

1.1 Certifications

Company

Leuze electronic GmbH + Co. KG in D-73277 Owen - Teck, Germany, has a certified quality assurance system in compliance with ISO 9001.

Products

SOLID-4 Safety Light Curtains are developed and manufactured in compliance with applicable European directives and standards.

EC Prototype Test in accordance with
EN IEC 61496-1 and prEN IEC 61496-2
carried out by:
TÜV PRODUCT SERVICE GmbH, IQSE
Ridlerstrasse 65
D-80339 Munich

1.2 Symbols and terms

Symbols used

⚠	Warning sign – This symbol indicates possible dangers. Please pay especially close attention to these instructions!
ℹ	Sign indicating important information.
➢	A note, which also refers to a course of action, provides information about special attributes or describes setting procedures.
	Symbols for SOLID-4 Transmitter General transmitter symbol Transmitter not active Transmitter active
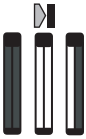	Symbols for SOLID-4 Receiver General receiver symbol The receiver's active protective field is not free, outputs in OFF-state The receiver's active protective field is free. Outputs in ON-state The receiver's active protective field is free. Outputs in OFF-state
⇒ ⇐ ⇔	Signal output Signal input Signal input and/or output

Table 1.2-1: Symbols

Terms used in this manual

Access guarding	Detection of a person's body on entry into the danger zone is required.
AOPD	**A**ctive **O**pto-electronic **P**rotective **D**evice
AOPD response time	Time between penetration/entry into the active protective field of the AOPD and when the OSSDs actually switch off.
AutoReset	When an error indication occurs, caused, for example, by faulty external wiring, the AOPD attempts to start again. If the error no longer exists, the AOPD returns to the normal state.
Contactor monitoring (EDM)	The contactor monitoring monitors the normally closed contacts of downstream positive-guided contactors and relays.
Danger zone guarding	Requires detection in the foot/leg area
EDM	External Device Monitoring
FC	Feedback circuit for EDM
OSSD1 OSSD2	Safety-related switching output **O**utput **S**ignal **S**witching **D**evice
Point of operation guarding	Requires finger, hand or arm detection
RES	Start/REStart interlock.
Scan	All beams, beginning with the synchronization beam, are pulsed by the transmitter in cycles one after the other.
SD4	SOLID-4 consisting of transmitter and receiver
SD4R	SOLID-4 Receiver
SD4R-E	SOLID-4 Receiver with selectable start/restart interlock and contactor monitoring function (EDM)
SD4T	SOLID-4 Transmitter
SingleScan	A switch-off is made if a beam is interrupted in the first scan of the Light Curtain.
SOLID-4E	SOLID-4 consisting of SD4T Transmitter and SD4R-E Receiver
Start/ restart interlock (RES)	RES prevents automatic start after the supply voltage has been turned on and after the protective field has been penetrated/ entered.
TC1/TC2	Transmission channel 1 and transmission channel 2

Table 1.2-2: Terms/terminology, SOLID-4 Safety Light Curtains

1.3 SOLID-4 selection

SOLID-4

t - Type of device

T: Transmitter

R: Receiver

rr - Resolution/range

14: 14 mm / 0.3 – 6 m

20: 20 mm / 0.7 – 14 m

30: 30 mm / 0.5 – 9 m

40: 40 mm / 0.9 – 20 m

90: 90 mm / 0.9 – 20 m

hhhh – Protective field heights

150 ... 1,800 mm

v – Functions (only with receiver)

E: With selectable start/restart interlock and monitoring function

k – Version/mode (only available with function "E")l

Without Standard model

H Host

G Guest

L L-Shape

U U-Shape

SD4trr-hhhhvk

Fig. 1.3-1: Selecting a SOLID-4 Safety Light Curtain

2 Safety

Before using the safety sensor, a risk evaluation must be performed according to valid standards (e.g. EN ISO 14121, EN ISO 12100-1, ISO 13849-1, IEC 61508, EN 62061). The result of the risk assessment determines the required safety level of the safety sensor (see Table 2.1-1). For mounting, operating and testing, document "SOLID-4 Safety Light Curtain" as well as all applicable national and international standards, regulations, rules and directives must be observed. Relevant and supplied documents must be observed, printed out and handed to the affected personnel.

Before working with the safety sensor, completely read and understand the documents applicable to your task.

In particular, the following national and international legal regulations apply for the start-up, technical inspections and work with safety sensors:

- Machinery directive 2006/42/EC
- Low voltage directive 2006/95/EC
- Electromagnetic compatibility directive 2004/108/EC
- Use of Work Equipment Directive 89/655/EEC supplemented by Directive 95/63 EC
- OSHA 1910 Subpart 0
- Safety regulations
- Accident-prevention regulations and safety rules
- Ordinance on Industrial Safety and Health and Labor Protection Act
- Device Safety Act

Notice!

For safety-related information you may also contact the local authorities (e.g., industrial inspectorate, employer's liability insurance association, labor inspectorate, occupational safety and health authority).

2.1 Approved purpose and foreseeable improper operation

Warning!

A running machine can cause severe injuries!
Make certain that, during all conversions, maintenance work and inspections, the system is securely shut down and protected against being restarted again.

2.1.1 Proper use

The safety sensor must only be used after it has been selected in accordance with the respectively applicable instructions and relevant standards, rules and regulations regarding labor protection and occupational safety, and after it has been installed on the machine, connected, commissioned, and checked by a competent person.

When selecting the safety sensor it must be ensured that its safety-related capability meets or exceeds the required performance level PL_r ascertained in the risk assessment.

The following table shows the safety-related characteristic parameters of the SOLID-4 Safety Light Curtain.

Type in accordance with IEC/EN 61496	Type 4
SIL in accordance with IEC 61508	SIL 3
SILCL in accordance with IEC/EN 62061	SILCL 3
Performance Level (PL) in accordance with ISO 13849-1: 2008	PL e
Category in accordance with ISO 13849	Cat. 4
Average probability of a failure to danger per hour (PFH_d) For protective field heights up to 900 mm, all resolutions For protective field heights up to 1800 mm, all resolutions For protective field heights up to 2850 mm, all resolutions	 6.0×10^{-9} $^1/_h$ 7.3×10^{-9} $^1/_h$ On request
Service life (T_M)	20 years

Table 2.1-1: Safety-related characteristic parameters of the SOLID-4 Safety Light Curtain

- The safety sensor protects persons at access points or at points of operation of machines and plants.
- The safety sensor with vertical mounting detects the penetration by fingers and hands at points of operation or by the body at access points.
- The safety sensor only detects persons upon entry to the danger zone; it does not detect persons who are located within the danger zone. For this reason, a start/restart interlock is mandatory.
- The safety sensor with horizontal mounting detects persons who are located within the danger zone (presence detection).
- The construction of the safety sensor must not be altered. When manipulating the safety sensor, the protective function is no longer guaranteed. Manipulating the safety sensor also voids all warranty claims against the manufacturer of the safety sensor.
- The safety sensor must be tested regularly by competent personnel.
- The safety sensor must be exchanged after a maximum of 20 years. Repairs or the exchange of parts subject to wear and tear do not extend the service life.

2.1.2 Foreseeable misuse

In principle, the safety sensor is not suitable as a protective device in case of:

- danger of objects being expelled or hot or dangerous liquids spurting from the danger zone
- applications in explosive or easily flammable atmospheres

2.2 Competent personnel

Prerequisites for competent personnel:

- he has a suitable technical education
- he knows the rules and regulations for occupational safety, safety at work and safety technology and can assess the safety of the machine
- he knows the instructions for the safety sensor and the machine
- he has been instructed by the responsible person on the mounting and operation of the machine and of the safety sensor

2.3 Responsibility for safety

Manufacturer and operating company must ensure that the machine and implemented safety sensor function properly and that all affected persons are adequately informed and trained.

The type and content of all imparted information must not lead to unsafe actions by users.

The manufacturer of the machine is responsible for:

- safe machine construction
- safe implementation of the safety sensor
- imparting all relevant information to the operating company
- adhering to all regulations and directives for the safe starting-up of the machine

The operator of the machine is responsible for:

- instructing the operating personnel
- maintaining the safe operation of the machine
- adhering to all regulations and directives for occupational safety and safety at work
- regular testing by competent personnel

2.4 Exemption of liability

Leuze electronic GmbH + Co. KG is not liable in the following cases:

- safety sensor is not used as intended
- safety notices are not adhered to
- reasonably foreseeable misuse is not taken into account
- mounting and electrical connection are not properly performed
- proper function is not tested (see Chapter 9).
- changes (e.g., constructional) are made to the safety sensor

2.5 SOLID-4 Safety Light Curtains with a resolution of 14 mm to 40 mm

are used for point of operation guarding, preferably in a vertical position.
(See Fig. 6.1-1). Depending on the resolution selected, they can detect:

Device type	Resolution	Detection with persons age 14 and over	Range	Preferred area of application
SD4T 14-.. / SD4R 14-..	14 mm	Finger	0.3 to 6 m	Point of operation guarding
SD4T 20-.. / SD4R 20-..	20 mm	Hand	0.7 to 14 m	Point of operation guarding
SD4T 30-.. / SD4R 30-..	30 mm	Hand	0.5 to 9 m	Point of operation guarding
SD4T 40-.. / SD4R 40-..	40 mm	Arm	0.9 to 20 m	Point of operation guarding

Table 2.5-1: SOLID-4 Safety Light Curtains for point of operation guarding

Warning!
Safety Light Curtains with > 40 mm resolution are not suitable for protection of points of operation for which finger, hand or arm resolution is required.

2.6 SOLID-4 Safety Light Curtains with a resolution of ≥ 40 mm

are preferably used for danger zone guarding (see Fig. 6.1-2). Predominantly in a horizontal position, the presence of people within the protective field is continuously monitored.

Device type	Resolution	Detection with persons age 14 and over	Range	Preferred area of application
SD4T 40-.. / SD4R 40-..	40 mm	From the feet upwards	0.9 to 20 m	Danger zone guarding
SD4T 90-.. / SD4R 90-..	90 mm	From the thigh upwards	0.9 to 20 m	Danger zone guarding

Table 2.6-1: SOLID-4 Safety Light Curtains for danger zone guarding

Note!
As an alternative to horizontal installation of Safety Light Curtains for danger zone guarding, a Safety Laser Scanner with configurable protective field can be used if safety category 3/PL d acc. to ISO 13849 is sufficient (information on ROTOSCAN Safety Laser Scanners can be obtained via our branch offices and partners or at www.leuze.de).

2.7 Additional safety instructions for access guarding with SOLID-4

Warning!

SOLID-4 Safety Light Curtains with a resolution of 14, 20, 30 or 40 mm detect hands, arms or bodies of a person entering the danger zone, and therefore can be placed closer to the danger zone than Safety Light Curtains with a resolution of 90 mm. In this case, the height of the highest and lowest beam above the reference plane must be selected in accordance with EN ISO 3857.

It applies for all versions that people are only detected during the access, their presence in the danger zone, however, is not detected! When one or more beams are interrupted by a person, the machine control unit must therefore go into safe interlock.

The start/restart interlock function is therefore obligatory for access guarding! The start/restart button for unlocking the device must be mounted in such a way that it cannot be reached from inside the danger zone and the entire danger zone is fully visible from its installation position. For this, see also Chapter 6.1.3.

3 System setup and possible uses

3.1 The opto-electronic protective device

Mode of operation

SOLID-4 consists of an SD4T transmitter and an SD4R receiver. Beginning with the first beam (the synchronizing beam) directly after the display panel, the transmitter pulses beam for beam in rapid sequence. The synchronization between transmitter and receiver is performed optically.

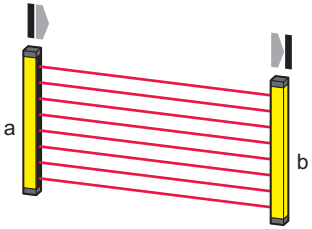

a = Transmitter
b = Receiver

Fig. 3.1-1: Working principle of the opto-electronic protective device

The SD4R receiver recognizes the specially formed pulse bundles of the transmitter beams and opens the corresponding receiver elements in sequence in the same rhythm. A protective field is consequently formed in the area between the transmitter and receiver, the height of which depends on the geometrical dimensions of the optical protective device, the width of which depends on the distance selected between the transmitter and receiver within the permissible range.

Basic functions, such as start/restart interlock and/or contactor monitoring, can optionally be performed by the electronics of receiver model SD4R-E. As a result, no downstream Safety Interface Device is generally necessary if receiver model SD4R-E is chosen.

3.2 Cascading option

To implement multiple linked protective fields, SOLID-4E Safety Light Curtains can be switched one after the other by cascading via plug-in cable connections or as fixed-connected L or U-shapes.

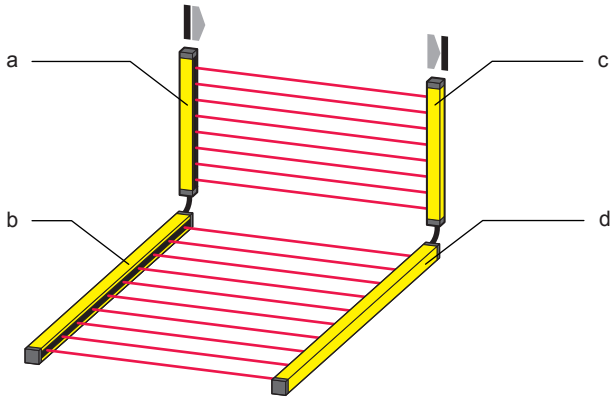

a = SDT transmitter, host (H)
b = SDT transmitter, guest (G)
c = SDR receiver, host (H)
d = SDR receiver, guest (G)

Fig. 3.2-1: Cascaded system setup with cable connection

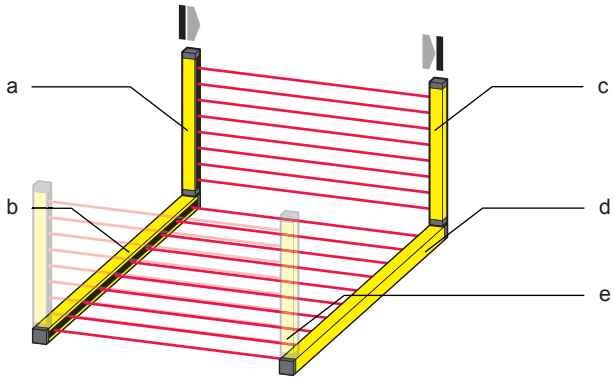

a = SDT transmitter, host (H)
b = SDT transmitter, guest (G)
c = SDR receiver, host (H)
d = SDR receiver, guest (G)
e = Optional guest for U-shape

Fig. 3.2-2: Cascaded system setup as fixed-connected L or U-shape

Cascading devices makes it possible to implement adjacent protective fields, for rear area protection without any additional expense for control and connection, for example. The host system is responsible here for all processor tasks, displays and the receiver-side interfaces to the machine and control devices.

The following limits must be observed:

- The height of the protective field for the first Light Curtain (host) must be at least 225mm.
- Ensure that the required range of the cascaded system is within the maximum range of all individual components.
- The maximum number of beams of all components must not exceed 240. For the number of beams n, for the individual components, please refer to the tables in Chapter 11.
- The connection cables between the individual components are part of the guest. The standard length is 300 mm. The connection to the host is made with an M12 plug.

An additional terminating plug must be used to be able to operate a host-guest without connected guest (see Chapter 12.3).

Note!

With cascaded devices the response time of the entire system is always produced by the response time of the individual devices used.

Warning!

With fixed-connected L and U-shapes, the resolution at the point of intersection can be greater than the resolution of the individual devices used (see L and U-Shape datasheet).

Devices with different resolutions can be combined for the variant with connection cable. Only devices with the same resolution can be combined for the variant with fixed-connected L and U-shape. All cascadable devices are only available as extended version with integrated start/restart interlock, contactor monitoring and reversible transmission channels.

Warning!

The safety distance must be calculated in accordance with the set resolution and the response time of the entire system (see Chapter 6).

4 Functions

4.1 Selectable functions of the SD4T Transmitter

4.1.1 Transmission channel

The infrared beams are modulated with specially shaped pulse bundles so that they are distinct from ambient light and undisturbed operation is consequently ensured. Welding sparks or warning flash lights from passing forklifts do not having any effect on the protective field.

If two protective fields are located directly next to each other for two adjacent machines, measures must, however, be implemented so that the optical protective devices do not affect each other.

Both transmitters should first be set up "back to back" so that the beams run in opposite directions. It is consequently impossible for them to affect each other.

Another possible way to suppress mutual influences is to switch one of the two protective devices from transmission channel 1 to 2, thereby switching them to differently formed pulse bundles. This solution should be considered when more than two optical protective devices must be arranged next to each other.

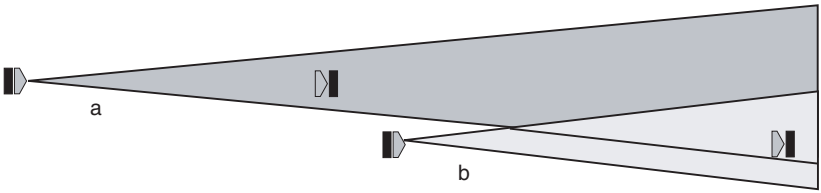

a = AOPD "A" transmission channel 1
b = AOPD "B" transmission channel 2, not affected by AOPD "A"

Fig. 4.1-1: Transmission channel selection

The change from transmission channel 1 to 2 must be made both on the transmitter and the receiver of the optical protective device in question. You will find more detailed information in Chapter 7.

4.2 Selectable functions of the SD4R-E Receiver

4.2.1 Transmission channel

If the corresponding transmitter is switched to transmission channel 2, the receiver must also be set to transmission channel 2. For this, see also Chapter 7.

4.2.2 Start/restart interlock (RES)

The start/restart interlock function prevents the safety circuits from being released automatically when the machine is turned on or the power supply is restored after a power outage. Only by pressing and releasing the start button within a time window is the receiver switched to the ON-state.

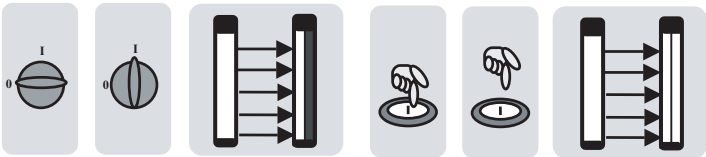

Fig. 4.2-1: Start/restart interlock function in effect when the supply voltage is turned on

If the protective field is penetrated, the start/restart interlock function ensures that the receiver will remain in the OFF state after the protective field is released again. The receiver will then not be switched back to the ON state until the start button is pressed and released again within a time window of 0.3 to 4 seconds.

Note!

The start button may not be pressed for longer than 10 seconds. An error message appears if this is exceeded.

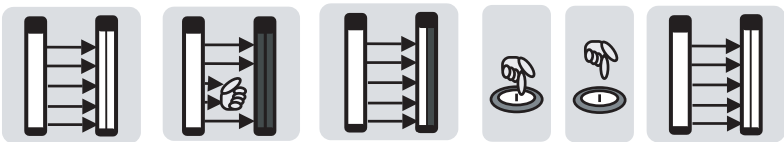

Fig. 4.2-2: Start/restart interlock function after interrupting the protective field

Warning!

Without the start/restart interlock, the receiver outputs immediately switch to the ON state after the machine has been turned on or the power supply has been restored and after the protective field has been freed! The operation of the protective device without start/restart interlock is only permitted in a few exceptional cases and under the conditions of controlling protective devices in accordance with EN ISO 12100-1 and EN ISO 12100-2. It must in particular be ensured here that it is impossible to walk or slip through the protective field.

In the case of access guarding applications, the start/restart interlock function is obligatory due to the fact that only access, and NOT the area between the protective field and the points of operation is monitored.

Warning!

Before unlocking the start/restart interlock, the operator must be absolutely certain that nobody is inside the danger zone.

Activate the start/restart interlock:

➢ with corresponding connection of the SOLID-4E receiver (see Chapter 7)
➢ or in the downstream safety interface (e.g. MSI series also for Leuze electronic muting or control functions)
➢ or in the downstream machine control unit
➢ or in the downstream safety PLC

If the internal start/restart interlock is activated as described in Chapter 7, the interlock functions are monitored dynamically. The SD4R-E receiver is only switched back to the ON-state after the start button has been pressed and released again. A further precondition here is, of course, that the active protective field is free.

If both the SOLID-4E-internal and a subsequent start/restart interlock are activated, the SOLID-4E will only perform a reset function with its assigned start button (confirmation).

4.2.3 Contactor monitoring (EDM)

Warning!

The contactor monitoring of the SOLID-4E can be activated with corresponding connection (see Chapter 7)!

The "Contactor monitoring" function dynamically monitors contactors, relays or valves downstream from the SOLID-4E. Precondition here are switching elements with positive-guided feedback contacts (normally closed).

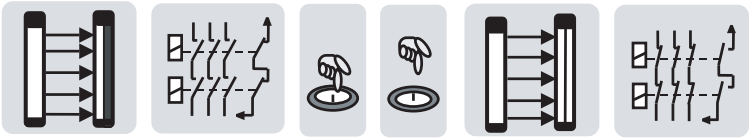

Fig. 4.2-3: Contactor monitoring function, combined in this example with RES interlock

You can implement the contactor monitoring function

➢ with corresponding connection of the SOLID-4E receiver (see Chapter 7)
➢ or the external contactor monitoring of the downstream safety interface (e.g. Leuze electronic MSI series)
➢ or the contactor monitoring of the downstream safety PLC (optional, connected via a safety bus)

If the contactor monitoring function is activated (see Chapter 7), it works dynamically, i.e. in addition to verifying that the feedback circuit is closed before turning on the OSSDs, the system checks whether the feedback circuit has opened within 500 ms of being enabled and whether it has closed again within 500 ms when turning off the OSSDs. If this is not the case, the OSSDs return to the OFF state again after being briefly switched on. An error code appears on the 7 segment display (F34) and the receiver goes to the error locking status, from which it can only be returned to normal operation by switching the supply voltage off and back on again.

4.3 Functions of receiver SD4R

No functions can be selected on receiver SD4R.

Attention!

Without start/restart interlock, the outputs of the receiver switch to the ON state immediately after the device is switched on or after the supply voltage is restored and following each release of the protective field! The protective device may only be operated without start/restart interlock in certain exceptional cases and under the conditions of controlling protective devices acc. to EN ISO 12100-1, EN ISO 12100-2. In this case, care must be taken to ensure that it is impossible to step or slip past the optical protective device.

Notice!

To guarantee proper operation, the transmitter that communicates with receiver SD4R must be set to transmission channel 1.

4.4 Diagnostics function: Dirt and error signal output

For diagnostic purposes SOLID-4 has a short circuit-proof "Weak Beam/Error Indication" signal output for forwarding to the machine control unit. Information on connection of the signal output and a connection example can be found in Chapter 7.

4.5 Test input

As a type 4 AOPD, SOLID-4 has a constant self-monitoring function that independently detects errors in the system as well as cross and short circuits on the output cables of the machine interface. An external test signal is not required for this. To test the downstream contactors, an external control (e.g. protective combination) via a test signal (= pin4 of the transmitter to 0 V or free) can switch off the OSSD outputs of the receiver and test the drop-out of the switching elements. The test time signal time is a maximum 3 seconds. After the test the OSSDs also go to the ON-state with activated start/restart interlock, provided the protective field is not interrupted.

5 Display elements

5.1 SD4T Transmitter status displays

If the transmitter's green LED1 is lit, this indicates that the supply voltage is present.

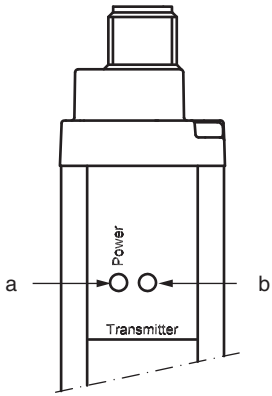

a = LED1 (green/red)
b = LED2 (green/red)

Fig. 5.1-1: Transmitter status displays

Display				Meaning
LED1	green	LED2	off	Operating voltage present, TC1 selected
LED1	green	LED2	green	Operating voltage present, TC2 selected
LED1	green	LED2	red	Operating voltage present, TC1 or TC2 selected, external test signal activated
LED1	red	LED2	any	Device fault

Table 5.1-1: Transmitter, LED status displays

5.2 SD4R-E Receiver status displays

Two LEDs and one 7-segment display report the receiver's operating status.

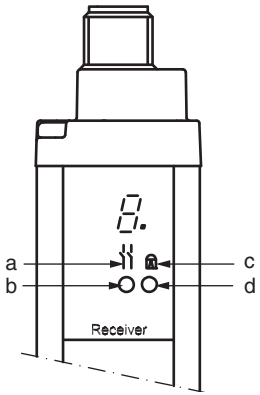

a = Symbol for OSSDs
b = LED1 (green/red)
c = Symbol for RES
d = LED2, yellow

Fig. 5.2-1: SD4R-E Receiver status displays

5.2.1 7-segment displays

After the electrical supply voltage is turned on, the following data appear on the receiver's 7- segment display:

7-segment display	Meaning
8.	Hardware reset when turned on
S	Self test running (for approx. 1.5 s)
1	Normal operation, channel 1
2	Normal operation, channel 2
F x	F = Device fault x = Fault number, alternating with "F"
1 or 2 flashing	Flashing transmission channel number →Weak signal, device not optimally aligned or dirty

Table 5.2-1: SD4R-E Receiver 7-segment display

5.2.2 LED displays

LED	Color	Meaning	
LED1	Red	RED =	OSSDs safety outputs in the OFF state
LED1	Green	GREEN =	OSSD safety outputs in the ON state
LED2	Yellow	ON =	Internal RES interlock activated; the OSSD safety outputs are switched to the OFF state. If the protective field is free, the device can be unlocked by pressing and releasing the start/restart button in a time window of 300 ms to 4 s.
		OFF =	If the OSSDs are in ON state (LED1 = green): Internal RES is unlocked or not selected. If OSSDs are in OFF state (LED1 = red): Internal RES is locked and the protective field is not free.

Table 5.2-2: SD4R-E Receiver LED displays

Note!
If all LED displays are in the OFF state at the same time, there is no supply voltage.

5.3 SD4R Receiver status displays

One LED and one 7-segment display report the receiver's operating status.

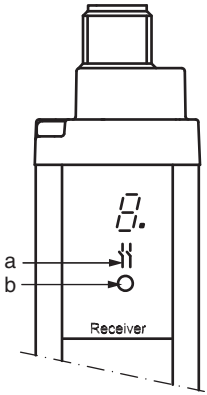

a = ymbol for OSSDs
b = LED1 (green/red)

Bild 5.3-1: SD4R Receiver status displays

5.3.1 7-segment display

After switching-on the supply voltage, the following data appears on the 7-segment display of the receiver:

7-segment display	Meaning
8.	Hardware reset at the moment of turn-on
S	Self test running (for approx. 1.5 sec)
1	Normal operation, channel 1
F x	F = device fault x = fault number; display alternates between this and "F"
1 or 2 flashing	Flashing number of the transmission channel →weak signal, device not optimally aligned or dirty

Table 5.3-1: 7-segment display receiver SD4R

5.3.2 LED displays

LED	Color	Meaning
LED1	red	RED = OSSD safety outputs in the OFF state
LED1	green	GREEN = OSSD safety outputs in the ON state

Table 5.3-2: LED displays – receiver SD4R

Notice!
If all LED displays are simultaneously in the OFF state, no supply voltage is present.

6 Installation

This section contains important information on installing the SOLID-4. The SOLID-4's protective function is only guaranteed if the following installation specifications are observed. These installation specifications are based on the respective applicable versions of European standards, such as EN 999 and EN ISO 13857. If a SOLID-4 is used in countries outside of the EU, the valid requirements in those countries must also be observed.

Installation is dependent on the type of protection as described in Chapter „Safety“. Because of this, the situations of:

- Point of operation guarding
- Danger zone guarding
- Access guarding

are considered separately below. The applicable distance from the protective device to reflective surfaces in the surrounding area is presented for all types of protection based on these situations.

6.1 Calculating minimum distances

Light Curtains can only perform their protective function if they are mounted with a sufficient safety distance.

The calculation formulas for the safety distance depend on the type of protection. In the harmonized European standard EN 999, "Positioning of protective devices with regard to approach speed of parts of the human body", the installation situations and calculation formulas for safety distance are described for the types of protection named above.

The formulas for the required distances to reflective surfaces are based on the European standard for "Active opto-electronic protective devices" prEN IEC 61496-2.

6.1.1 Safety distance for point of operation guarding

Calculation of the safety distance for a SOLID-4 Safety Light Curtain with resolution of 14, 20, 30 or 40 mm for point of operation guarding:

The safety distance "S" for point of operation guarding is calculated in accordance with EN 999 with the formula:

S [mm] = K [mm/s] x T [s] + C [mm]

S = Safety distance in mm
If the result is less than 100 mm, a distance of at least 100 mm must still be maintained.

K = Approach speed in mm/s
In the close area of 500 mm, 2,000 mm/s is used for the calculation. If the distance is greater than 500 mm, K = 1,600 mm/s can be used for the calculation. In this case, however, a minimum of 500 mm applies for the safety distance.

T = Total delay time in seconds;
total from:
The response time of the protective device, t_{AOPD} a)
The response time of the safety interface, if any, $t_{Safety\ interface}$ b)
The machine's stopping time, $t_{Machine}$ c)

C = 8 x (d-14) in mm
Additional amount depending on the depth of penetration into the protective field before turning on the AOPD

d = Resolution of the AOPD

a) See Chapter 11.2
b) See safety interface technical data
c) See technical data of the machine or stopping time measurement

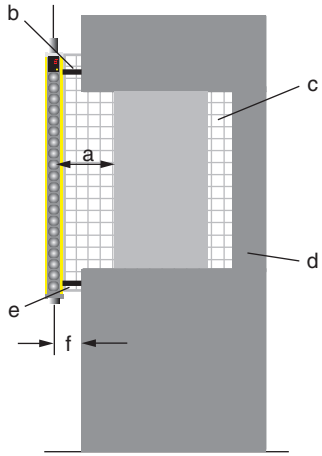

a = Safety distance (S)
b = Measures to prevent penetration from above
c = Measures to prevent penetration from the sides
d = Measures to prevent penetration from the rear
e = Measures to prevent penetration from below
f = 75 mm – Maximum distance to avoid walking behind*

Fig. 6.1-1: Safety distance (a) for point of operation guarding

*) If this value cannot be achieved because of the safety distance, other measures, e.g. mechanical barriers, must guarantee the required maximum distance of 75 mm.

Warning!
If AOPDs with additional control functions are used, the resolution must be ≤30 mm and the minimum distance must be S ≥ 150 mm.

$$S\ [mm] = 2000\ [mm/s] \times (t_{AOPD} + t_{Safety\ interface} + t_{Machine})\ [s] + 8 \times (d-14)\ [mm]$$

Calculation example for point of operation guarding:

A Safety Light Curtain with a resolution of 20 mm, protective field height 1500 mm is used on a machine with a stopping time of 150 ms. The response time of the safety interface is 20 ms.

Stopping time of the machine $t_{Machine}$	=	150 ms
Response time t_{AOPD}	=	25 ms
Response time $t_{Safety\ interface}$	=	20 ms
Resolution d of the AOPD	=	20 mm
T = 0.150 s + 0.025 s + 0.020 s	=	0.195 s
S = 2000 x 0.195 + 8 x (20 -14)	=	438 mm

Warning!

Make certain during assembly that it is not possible to reach over, around or under or to walk behind the protective device.

6.1.2 Safety distance for danger zone guarding

Calculation of the safety distance and required resolution for a Safety Light Curtain for danger zone guarding.

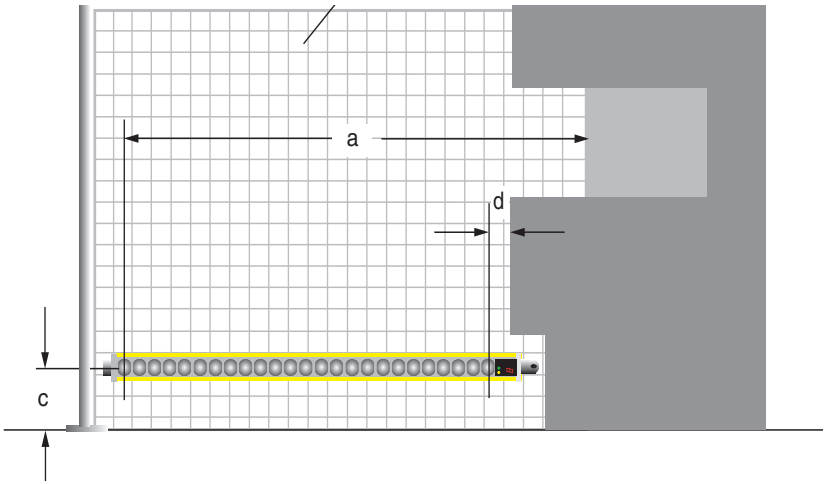

a = Safety distance (S)
b = Measures to prevent access from the sides
c = Height above floor
d = 50 mm – Maximum distance to avoid walking behind*

Fig. 6.1-2: Safety distance (a) and height (c) for danger zone guarding

*) If this value cannot be achieved because of the safety distance, other measures, e.g. mechanical barriers, must guarantee the required maximum distance of 50 mm. From 375 mm height above the floor 75 mm are permissible.

The height of the protective field H above the reference plane and the resolution d of the AOPD are related to each other as follows:

H_{min} [mm] = 15 x (d -50) [mm] or d [mm] = H_{min}/15 + 50 [mm]

H_{min} = Minimum height of the protective field above the reference plane, maximum height = 1000 mm
Heights equal to or less than 300 mm are considered too low for adults to crawl under

d = Resolution of the AOPD

The safety distance "S" for danger zone guarding is calculated in accordance with EN 999 using the formula:

S [mm] = K [mm/s] x T [s] + C [mm]

S = Safety distance in mm

K = Approach speed of 1600 in mm/s.

T = Total delay time in seconds;
total from:
The response time of the protective device, t_{AOPD} a)
The response time of the safety interface, if any, $t_{Safety\ interface}$ b)
The machine's stopping time, $t_{Machine}$ c)

C = (1200 mm – 0,4 H), but not less than 850 mm (arm's length)

H = Height of the protective field above the floor

a) See Chapter 11.2
b) See safety interface technical data
c) See technical data of the machine or stopping time measurement

$$S\ [mm] = 1600\ [mm/s] \times (t_{AOPD} + t_{Safety\ interface} + t_{Machine})\ [s] + (1200 - 0.4\ H)\ [mm]$$

6.1.3 Safety distance and beam heights for Safety Light Curtains as access guarding

Determination of the beam heights and calculation of the safety distance of Safety Light Curtains with a resolution of 14, 20, 30 or 40 mm for use as access guarding, for example with limited space between the protective field and point of operation.

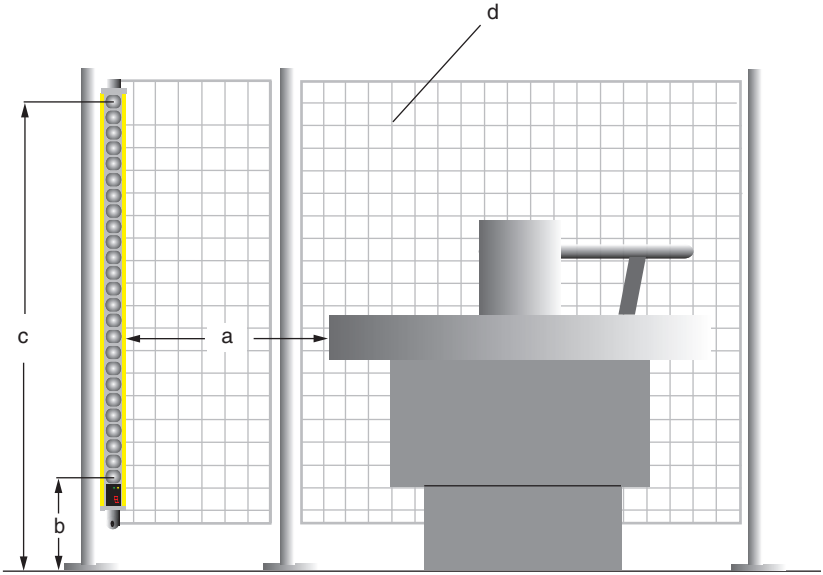

a = Safety distance (protective field/point of operation)
b = Height of the lowest beam above the reference level, see table 6.1-1
c = Height of the highest beam, see table 6.1-1
d = Measures to prevent access from the sides

Fig. 6.1-3: Access guarding with Safety Light Curtain, resolution of 14, 20, 30 or 40 mm

Warning!

Please also observe the additional safety instructions for access guarding with SOLID-4 in Chapter 2.7.

Beam heights with use of Safety Light Curtains for access guarding in accordance with EN 999 and EN ISO 13857:

Version	Resolu-tion	Lowest beam above reference plane	Highest beam above reference plane	Additional amount C (see formula)
SD4-14-hhhh	14 mm	As per EN ISO 13857	As per EN ISO 13857	0 mm
SD4-20-hhhh	20 mm	As per EN ISO 13857	As per EN ISO 13857	48 mm
SD4-30-hhhh	30 mm	As per EN ISO 13857	As per EN ISO 13857	128 mm
SD4-40-hhhh	40 mm	As per EN ISO 13857	As per EN ISO 13857	208 mm
SD4-90-hhhh	90 mm	300 mm	1200 mm	850 mm

Table 6.1-1: Beam heights above the reference plane and additional amount C for access guarding applications

Calculation formula for safety distance S based on EN 999:

Calculation of the safety distance for a Safety Light Curtain with a resolution of up to 40 mm, used for access guarding. The safety distance S is calculated as per EN 999 according to the formula:

$$S\ [mm] = K\ [mm/s] \times T\ [s] + C\ [mm]$$

S = Safety distance in mm

K = Approach speed in mm/s
In the close area of 500 mm, 2,000 mm/s is used for the calculation. If the distance is greater than 500 mm, K = 1,600 mm/s can be used for the calculation. In this case, however, a minimum of 500 mm applies for the safety distance.

T = Total delay time in seconds;
total from:
The response time of the protective device, t_{AOPD} a)
The response time of the safety interface, if any, $t_{Safety\ interface}$ b)
The machine's stopping time, $t_{Machine}$ c)

C = 8 x (d-14) in mm
Additional amount depending on the depth of penetration into the protective field before turning on the AOPD

d = Resolution of AOPD up to a maximum of 40 mm

a) See Chapter 11.2
b) See technical data of the safety interface
c) See technical data of the machine or stopping time measurement

$$S\ [mm] = 2000\ [mm/s] \times (t_{AOPD} + t_{Safety\ interface} + t_{Machine})\ [s] + 8 \times (d-14)\ [mm]$$

If the resolution is greater than 40 mm, for example for SOLID-4 Safety Light Curtains with a resolution of 90 mm, an additional amount is required:

C = 850 mm (arm's length)

The safety distance with 90 mm is therefore calculated according to the following formula:

S [mm] = 1600 [mm/s] x (t_{AOPD} + $t_{Safety\ interface}$ + $t_{Machine}$) [s] +850 [mm]

Warning!

Please also observe the additional safety instructions for access guarding with SOLID-4 in Chapter 2.7.

Warning!

When using access guarding, it must be ensured that the start/restart interlock function is active and that unlocking from inside the danger zone is not possible.

6.1.4 Minimum distance from reflective surfaces

Warning!

Reflective surfaces near optical protective devices can indirectly deflect the transmitter's beams into the receiver. This can cause an object in the protective field not to be detected! Therefore, all reflective surfaces and objects (material containers, cans, etc.) must be kept at a minimum distance from the protective field. The minimum distance depends on the distance "b" between the transmitter and the receiver.

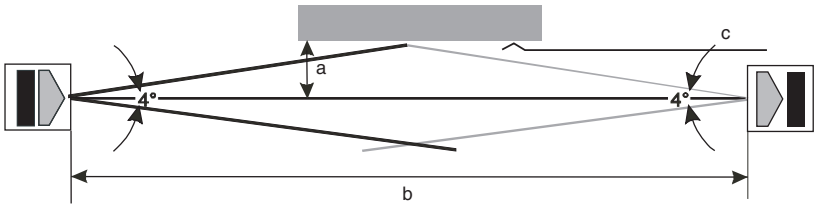

a = Distance
b = Protective field width
c = Reflective surface

Fig. 6.1-4: Minimum distances from reflective surfaces

With the calculation of the minimum distance to reflective surfaces it must be ensured that with a protective field width of 3 m or less, at least a minimum distance of 131 mm is achieved. With protective field widths over 3 m the minimum distance "a" is calculated using the following formula:

a [m] = 0.044 x b [m]

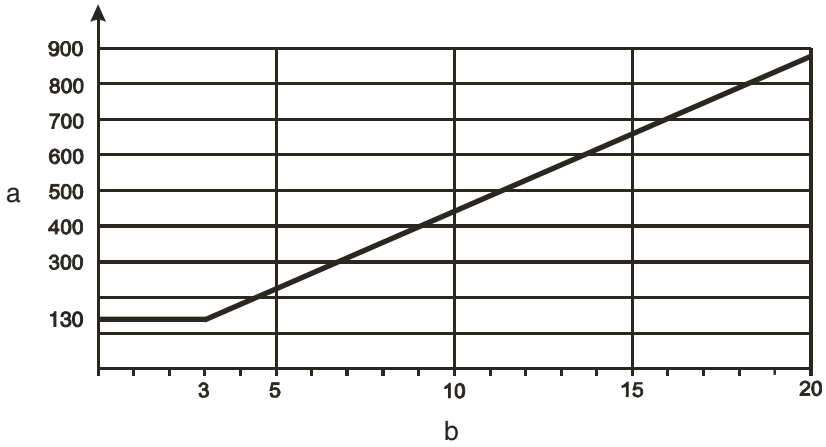

a = Distance [mm]
b = Protective field width [m]

Fig. 6.1-5: Minimum distances from reflective surfaces as a function of the width of the protective field

6.2 Mounting notes

Special notes on mounting a SOLID-4 Safety Light Curtain for **point of operation guarding**:

➢ Calculate the safety distance according to the formula in Chapter 6.1.1.

➢ Ensure that it is impossible to reach under, over, around or walk behind the Safety Light Curtain.

➢ Observe the maximum distance between machine table and protective field of 75 mm, with reference to a table height of 750 mm. If this is not possible because the safety distance is too big, a mechanical barrier must be provided.

➢ Observe the minimum required distance to reflective surfaces.

Special notes on mounting a SOLID-4 Safety Light Curtain for **danger zone guarding**:

- ➢ Calculate the safety distance according to the formula in Chapter 6.1.2. The resolution determines the minimum height of the protective field above the floor.
- ➢ Ensure that the maximum height of the protective field above the reference plane of 1000 mm is not exceeded and only heights equal to or less than 300 mm are considered impossible for an adult to crawl under (also see EN 999).
- ➢ It must not be possible to step into the danger zone from the sides. Suitable hard guards must be provided.
- ➢ When mounting the device, ensure that it is impossible to pass onto the housings of the optical components (thereby allowing entrance into the danger zone).

Note!

Positioning behind corresponding cutouts on the hard guards on the sides prevents stepping onto transmitter or receiver housings.

- ➢ Consider the position of the last light beam before the machine. It must not be possible to stand undetected between this light beam and the machine.

Special notes on mounting a SOLID-4 Safety Light Curtain for **access guarding**:

- ➢ Calculate the safety distance according to the formula in Chapter 6.1.3.
- ➢ The highest and the lowest light beam and therefore the height of the protective field for Safety Light Curtains with a resolution of 14, 20, 30 or 40 mm is determined by the requirements in acc. with EN ISO 13857.
- ➢ Access guarding may only be operated with the start/restart interlock function. Activate the internal RES interlock function of the SD4R-E or the RES interlock function of the downstream interface and check their effectiveness.
- ➢ Ensure while installing the start/restart button, that it is impossible to press this button from inside the danger zone. Make sure that the complete danger zone can be seen from the location of the button.

6.3 Mechanical mounting

What should generally be taken into consideration during installation?

- ➢ Ensure that transmitter and receiver are mounted on an even surface at the same height.
- ➢ Use screws for mounting that can only be loosened with a tool.
- ➢ Fix the transmitter and receiver in position so that they cannot be shifted. Securing transmitter and receiver so they cannot be moved or swiveled is especially important in the close area with a narrow protective field.
- ➢ The connections of transmitter and receiver must be pointing in the same direction.
- ➢ The safety distance between the protective field and the point of operation must be observed.
- ➢ Ensure that access to the point of operation/danger zone is only possible through the protective field. Additional access points must be guarded separately (e.g. by hard guards, additional Light Curtains or doors with locking devices).

6.4 Mounting types

6.4.1 Standard mounting

Four brackets that can rotate 360° (two each for transmitter and receiver) are included with delivery.

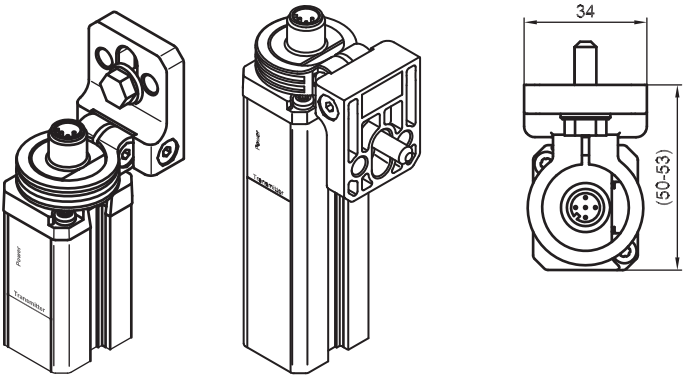

Fig. 6.4-1: 360° rotation bracket, mounting examples

6.4.2 Option: Mounting with swiveling brackets

Four swivel mounting brackets with shock absorbers can be ordered optionally. They are not included with delivery. The swivel range is ± 8°.

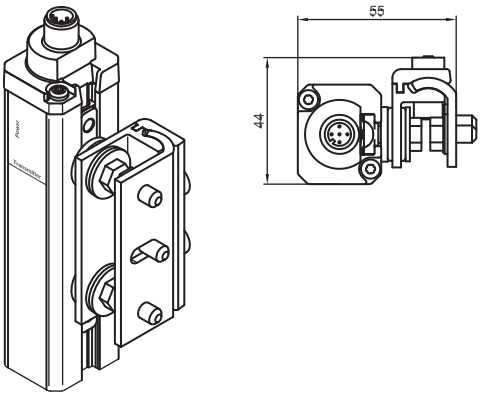

Fig. 6.4-2: Swiveling bracket with shock absorber

6.4.3 Option: Side mounting

Mounting is optionally possible with mounting brackets with sliding nuts on the side slot. They are not included with delivery.

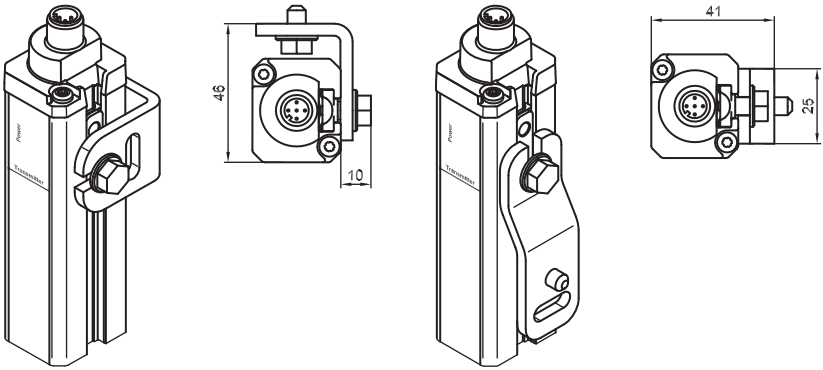

L-mounting bracket Z-mounting bracket

Fig. 6.4-3: Mounting examples, L-mounting bracket and Z-mounting bracket

7 Electrical connection

- The electrical connection must be performed by experienced personnel. Knowledge of all safety notes contained in these operating instructions is part of this competence.
- The external supply voltage of 24 V DC +/- 20% must guarantee safe isolation from the mains voltage in accordance with IEC 60742 and be able to bridge a power outage period of at least 20 ms. Leuze electronic offers suitable power supplies (see list of accessories in the Appendix Chapter 12). Transmitters and receivers must be supplied from a shared power supply and must be fused against overcurrent (see Chapter 7.2).
- Basically both safety switching outputs OSSD1 and OSSD2 must be looped into the working circuit of the machine.
- Signal outputs may not be used for switching safety-relevant signals.
- The start/restart button for unlocking the restart interlock must be mounted in such a way that it cannot be reached from the danger zone and the entire danger zone is fully visible from its installation position.
- It is vital during the electrical installation that the power of the machine or system to be protected is switched off and locked, so that the dangerous movements cannot be started unintentionally.

7.1 M12 coupling

Transmitter and receiver are equipped with an M12 coupling; the transmitter with a 5-pin M12 coupling and the receiver with an 8-pin M12 coupling.

Warning!

To ensure safe operation of the SOLID-4, only the connecting cables listed in Chapter 12.3 – Accessories may be used.

7.1.1 Transmitter

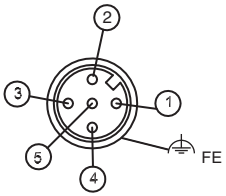

Fig. 7.1-1: SD4T 5-pin (view of the pins)

Pin	Cable colors	Assignment		Inputs/outputs
1	Brown	⇐	Supply voltage	24 V DC for TC1 and 0 V for TC2
2	White		nc	
3	Blue	⇐	Supply voltage	0 V for TC1 and 24 V DC for TC2
4	Black	⇐	Test in	Test input Connected to 24 V DC →Normal operation to 0 V or free →External test activated
5	Gray	⇔	Device internally wired on housing	Functional earth
Mounting plug housing	Braided shield	⇔	Shield	Functional earth

Table 7.1-1: Transmitter, connection assignment

The polarity of the power supply from Pin1 and Pin3 determines the selected optical transmission channel. If 24 V DC is present on Pin1 and 0 V on Pin3, transmission channel 1 is selected. If 0 V is present on Pin1 and 24 V DC on Pin3, transmission channel 2 is selected.

Note!

Make certain you select the same transmission channel for both, for transmitter and receiver.

For optimum shielding, connecting cables with which the shield is routed on the knurled nut of the housing coupling must be used (suitable cables are listed under accessories in Chapter 12.3).

7.1.2 Receiver SD4R-E

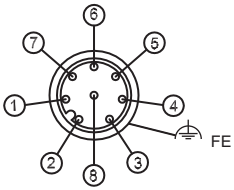

Fig. 7.1-2: SD4R-E 8-pin (view of the pins)

Pin	Color	Assignment		Function
1	White	⇔	Input: Start/restart Signal output: Weak signal/ error	Start/restart normally open contacts against 24 V DC Weak signal/error: 24 V DC light reception, strong, 0 V light reception weak or error
2	Brown	⇐	Supply voltage	24 V DC for TC 1 and 0 V for TC 2
3	Green	⇐	Input: Operating mode/feedback circuit, EDM	Contactor monitoring (EDM): 24 V DC: Without EDM 0 V: With EDM and FC closed High impedance: With EDM and FC open
4	Yellow	⇐	Input: Operating mode	Start/restart interlock (RES): 24 V DC: With RES Jumper to Pin1: Without RES (note: signal output remains functional)
5	Gray	⇒	Output	OSSD1, transistor switching output
6	Pink	⇒	Output	OSSD2, transistor switching output
7	Blue	⇐	Supply voltage	0 V for TC 1 and 24 V DC for TC 2
8	Red	⇔	Device internally wired on housing	Functional earth
Mounting plug housing	Braided shield	⇔	Shield	Functional earth

Table 7.1-2: SD4R-E Receiver connection assignment

7.1.2.1 Transmission channel selection

The polarity of the power supply from Pin2 and Pin7 determines the selected optical transmission channel.
If 24 V DC is present on Pin2 and 0 V on Pin3, transmission channel 1 is selected. If 0 V is present on Pin2 and 24 V DC on Pin7, transmission channel 2 is selected.

Note!
Make sure that you select the same transmission channel for both transmitter and receiver.

For optimum shielding, connecting cables with which the shield is routed on the knurled nut of the housing coupling must be used (suitable cables are listed under accessories in Chapter 12.4).

7.1.2.2 Operating mode selection, start/restart interlock (RES) and contactor monitoring (EDM).

The SD4R-E Receiver must be connected via an 8-pin M12 coupling. The RES/EDM functions can be activated via the operating mode selections, Pin3 and Pin4.

Warning!

The operating mode switchover must only be made in the switched-off state. Operating mode switchovers (RES/EDM) during operation cause a fault (F32/F33), which can only be removed by interrupting the voltage supply.

	Without EDM Without RES	**Without EDM With RES**	**With EDM Without RES**	**With EDM With RES**
Pin3	24 V DC	24 V DC	0 V via closed feedback circuit	0 V via closed feedback circuit
Pin4	Jumper to Pin1	24 V DC	Jumper to Pin1	24 V DC
Note on Pin1	Signal output, weak signal/error	Start button, normally open contact to 24 V DC and signal output, weak signal/error	Signal output, weak signal/error	Start button, normally open contact to 24 V DC and signal output, weak signal/error

Table 7.1-3: SOLID-4 SD4R-E Receiver operating mode selection

7.1.3 Receiver SD4R

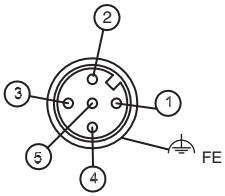

Fig. 7.1-3: SD4R 5-pin (view of the pins)

Pin	Color	Assignment		Function
1	Brown	⇐	Supply voltage	24 V DC
2	White	⇒	Output	OSSD1, transistor switching output
3	Blue	⇐	Supply voltage	0 V
4	Black	⇒	Output	OSSD2, transistor switching output
5	Gray	⇔	Device internally wired on housing	Functional earth
Mounting plug housing	Braided shield	⇔	Shield	Functional earth

Table 7.1-4: SD4R Receiver connection assignment

Notice!

When using an SD4R receiver, make certain to select transmission channel 1 on the corresponding transmitter.

For the best-possible shielding, use connecting cables on which the shield extends to the knurled nut of the housing coupling (suitable cables are listed under accessories, Chapter 12.4).

7.2 Connection examples

7.2.1 Connection example for transmission channel 1(TC1)

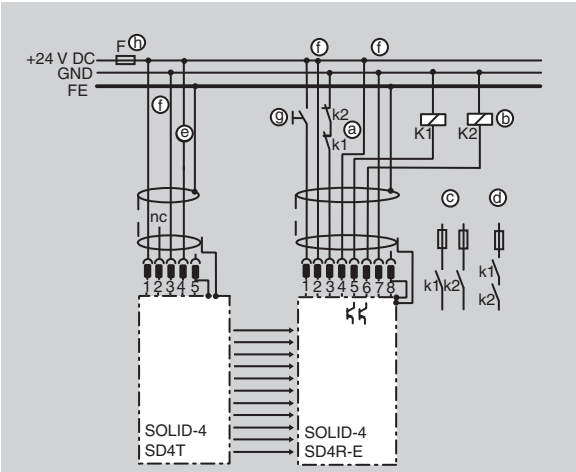

a = EDM feedback circuit
b = Positive-driven relays, spark suppression is provided by the receiver
c = Release circuit, 2-channel*
d = Release circuit, 1-channel*
e = External testing selected
f = Polarity for transmission channel 1
g = Start/restart button
h = 2 A fine-wire fuse, melting fuse

*) Always use both of the contacts in the release circuit; protect against overcurrent.

Fig. 7.2-1: SD4R-E Receiver, TC 1, with RES, with EDM

7.2.2 Connection example for transmission channel 2 (TC2)

When selecting TC 2, the polarity of the supply voltage on the transmitter and the receiver must be reversed.

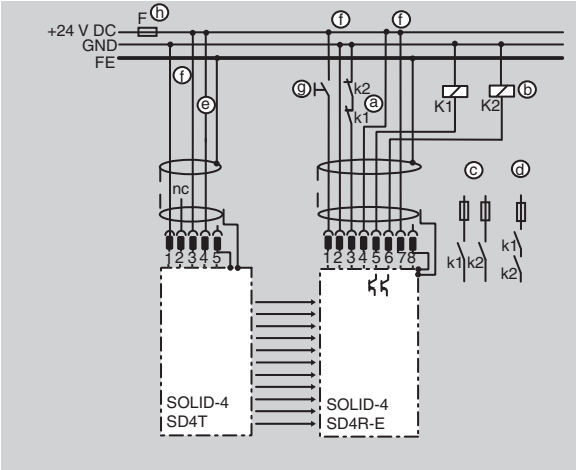

a = EDM feedback circuit
b = Positive-driven relays, spark suppression is provided by the receiver
c = Release circuit, 2-channel*
d = Release circuit, 1-channel*
e = External testing selected
f = Polarity for transmission channel 2
g = Start/restart button
h = 2 A fine-wire fuse, melting fuse

*) Always use both contacts in the release circuit.

Fig. 7.2-2: SD4R-E Receiver, TC2, with RES, with EDM

7.2.3 SOLID-4 connection example with downstream relay module, MSI-RM2

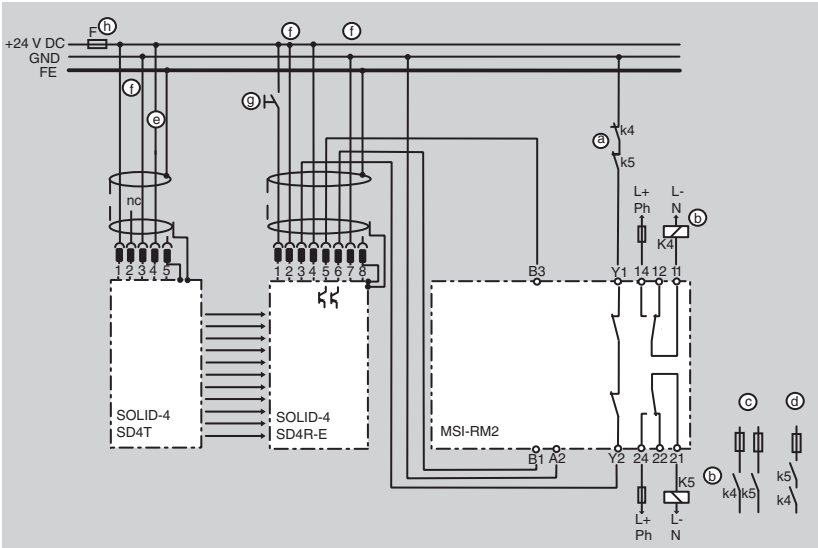

a = EDM feedback circuit
b = Positive-driven relays, spark suppression required
c = Release circuit, 2-channel*
d = Release circuit, 1-channel*
e = External testing selected
f = Polarity for transmission channel 1
g = Start/restart button
h = 2 A fine-wire fuse, melting fuse

*) Always use both contacts in the release circuit.

Fig. 7.2-3: SD4R-E Receiver, TC1, with RES, with EDM and MSI-RM2

Warning!

If K4 and K5 are installed in the same switching rack as the MSI-RM2, each relay must be connected via a separate connecting cable with the MSI-RM2. The connecting cables must be routed in a strong conduit so that mechanical damage is prevented. Also be sure to follow the MSI-RM2 connection and operating instructions.

Note!

Additional functions such as Muting or Cycle Control can be implemented with intelligent safety interfaces of the MSI series from Leuze electronic. For this, see accessories in Chapter 12.3.

7.2.4 Connection example of SOLID-4 with downstream MSI-SR4 Safety Interface Device

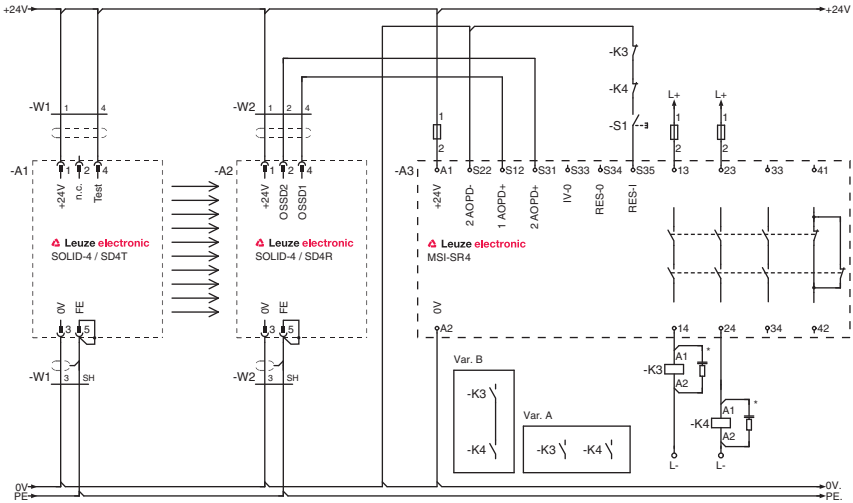

Figure 7.2-4: Receiver SD4R with MSI-SR4

Attention!

If K3 and K4 are installed in the same switching rack as the MSI-SR4, each relay must be connected via a separate connecting cable with the MSI-SR4. The connecting cables must be routed in a strong conduit so that mechanical damage is prevented. Also be sure to follow the MSI-SR4 connection and operating instructions.

8 Startup

Warning!

Before starting up the SOLID-4 on a power-driven production machine for the first time, an experienced and commissioned person with suitable training must check the entire setup and the integration of the opto-electronic protective device into the machine control system.

Before switching on the supply voltage for the first time and while the transmitters and receivers are being aligned, it must also be ensured that the outputs of the optical protective device do not have any effect on the machine. The switching elements that finally set the dangerous machine in motion must be safely switched off and secured from restarting.

The same precautionary measures apply after each change in parameter-based functions of the optical protective device, after repairs or during maintenance work.

Only after it has been determined that the optical protective device functions correctly can it be integrated into the machine's control circuit!

8.1 Switching on

Warning!

Without internal start/restart interlock function and with free protective field the OSSDs immediately switch to the ON state!

Make sure that the transmitter and receiver are protected against overcurrent (for fuse size see Chapter 7.2). There are special requirements for the supply voltage: The power supply must guarantee secure mains supply isolation, have a load current reserve of at least 250 mA and be able to bridge a power outage for at least 20 ms.

8.1.1 Display sequence with SD4T Transmitter

After the power supply is turned on and the self-test is completed, the LEDs indicate the current operating status (see Chapter 5.1).

Warning!

If the transmitter signals with error display (LED1 lights permanently red/LED2 any display), the 24 V DC supply voltage and the wiring must be checked. If the error remains after it is turned on again, stop the startup process immediately and send in the defective transmitter to be checked.

8.1.2 Display sequence with SD4R-E Receiver

After the device is turned on, "8." appears for a few moments on the transmitter display followed by an "S" for about 1.5 seconds for the self test. The display then switches and permanently shows the selected transmission channel, "1" or "2".

Warning!

If the receiver signals with the error display, the 24 V DC supply voltage and the wiring must be checked. If the display remains after it is turned on again, stop the startup process immediately and send in the defective receiver to be checked.

The displays of the receiver LEDS after switching on: without start/restart interlock function (RES, FS).

Warning!

The receiver switches to the ON-state as soon as it receives all beams!

LED	**Without** internal RES, transmitter/receiver aligned and protective field **free**		**Without** internal RES, transmitter/receiver not aligned or protective field **not free**	
LED1	Green =	ON-state of the OSSDs	Red =	OFF state of the OSSDs
LED2	No display =	RES not locked	No display =	RES not locked

Table 8.1-1: LED displays, receiver SD4R-E with start/restart interlock not activated (RES)

The LED displays of the SD4R-E Receiver with activated internal start/restart interlock function after it is turned on (for activation see Chapter 7.1.2):

LED	**With** internal RES, **before** unlocking with the start/restart button while the protective field is **free**		**With** internal RES, **before** unlocking with the start/restart button while the protective field is **interrupted**	
LED1	Red =	OFF state of the OSSDs	Red =	OFF state of the OSSDs
LED2	Yellow =	RES locked	No display =	RES locked

Table 8.1-2: LED displays, receiver SD4R-E with start/restart interlock activated (RES)

LED	**With** internal RES, **after** unlocking with the start/restart button while the protective field is **free**	
LED1	Green =	ON-state of the OSSDs
LED2	No display =	RES unlocked

Table 8.1-3: LED displays, receiver SD4R-E with start/restart interlock activated (RES)

8.1.3 Display sequence on receiver SD4R

After switch-on, "8." appears on the transmitter display for a few moments followed by an "S" for approx. 1.5 sec. indicating a self test. The display then switches and constantly displays the selected transmission channel, either "1" or "2".

Attention!

If the receiver responds with the error display, the 24 V DC connection voltage and wiring are to be inspected. If the display persists after switching on again, immediately interrupt start-up and return the defective receiver to us for inspection.

The displays on the receiver LEDs after switch-on:

Attention!

As soon as the receiver receives all beams, it switches to the ON state!

LED	Transmitter/receiver aligned and protective field **clear**		Transmitter/receiver not aligned or protective field **not clear**	
LED1	green =	ON-state of the OSSDs	red =	OFF-state of the OSSDs

Table 8.1-4: LED display – receiver SD4R

8.2 Aligning transmitter and receiver

Transmitter and receiver must be at the same height or, if installed in a horizontal position, be at the same distance from the reference surface and lightly fastened at first. The narrow specified angle of beam spread of ± 2° requires increased precision in aligning the two components with each other before the devices are screwed firmly into place.

Note!

If cascaded AOPDs are aligned with each other, it must always be in the order of host first, then guest.

8.2.1 Optimizing alignment by turning and/or tilting the transmitter and receiver

The difference between free protective field (display shows the numbers of the transmission channel) and weak signal (channel number flashes on the display) enables alignment optimization.

If the components are already aligned, it is recommended that you optimize the alignment, e.g. by turning the receiver. Turn the receiver with slightly loosened brackets until the 7-segment display starts to flash. Take note of the position. Now turn the receiver in the opposite direction until the display lights constantly and further, until it flashes again. Now turn the receiver back in between the two positions determined. Screw the receiver firmly into place to prevent turning. Now do the same with the transmitter.

For cascaded systems, the procedure can be performed for all transmitters and receivers one after the other, beginning with the host. A precise preliminary alignment of all components is also required here.

9 Testing

9.1 Testing before first startup

Testing by an experienced technician before first startup must ensure that the optical protective device and any other safety components that might be present have been selected in accordance with local regulations and applicable European Directives, especially the European Machine and Work Equipment Directive and that they provide the required protection when properly operated.

- ➢ Use the regulations listed above, where required, with the help of the checklists provided in the Appendix of these instructions, to check that the protective devices are properly installed, that they are properly wired into the controls and that they work in all machine operating modes. When selecting the checklist, note the type of protection (point of operation, danger zone or access guarding).
- ➢ The same testing requirements apply if the machine in question has not been operated for a longer period of time and after major modifications or repairs if this could affect the safety of the machine.
- ➢ Observe the specifications regarding the instructing of operation personnel by experienced technicians before work is started. Instructing personnel is the responsibility of the machine owner.

The results of this test are documented for the machine owner in accordance with ISO 9000 ff.

9.2 Regular tests

Regular tests must also be carried out in accordance with local regulations. These are designed to discover changes (e.g. in stopping times) or manipulations to the machine or protective device.

- ➢ You must have the effectiveness of the protective device checked by an experienced technician at suitable intervals, but at least once a year.
- ➢ The applicable checklist in the Appendix may also be used during regular testing.

Leuze electronic also provides a specialist service for regular tests.

9.3 Daily testing with the test rod

SOLID-4 are self-monitoring Safety Light Curtains. Nevertheless it is very important to check the effectiveness of the protective field every day to be sure that the protection also remains effective at every point after a parameter or tool change.

Warning!

Never use your fingers, hand or arm for checking the system!

➢ When selecting the test rod, use the identification plate of the receiver with the resolution information as a guideline.

➢ If the internal start/restart interlock function is selected, but the AOPD is released, LED1 lights up green on the SD4R-E Receiver. When the test rod is inserted, LED1 switches to red, and the restart interlock locks. During the testing procedure, LED2 must not light up at any position of the protective field. Only after the test rod has been taken out of the protective field does LED2 light up yellow (restart interlock locked).

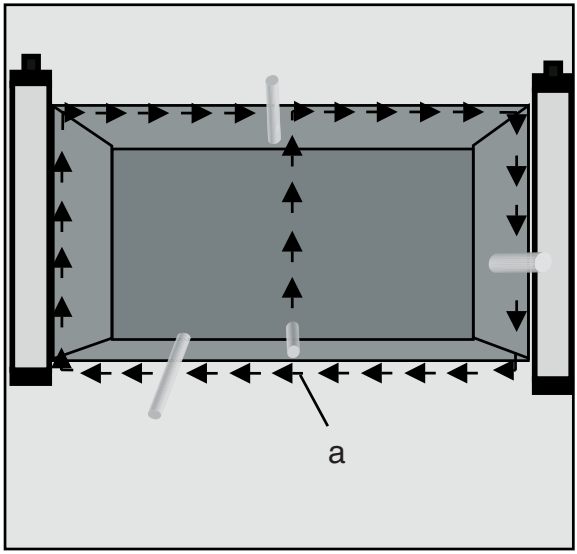

a = Test start

Fig. 9.3-1: Testing the protective field with the test rod

➢ If the AOPD is being operated without the internal start/restart interlock, it is sufficient to watch LED1 on the receiver during the testing procedure. When the test rod is inserted into the protective field, this LED1 must switch from "green" to "red" and must not switch back to "green" at any point during the test.

Warning!

If the test does not provide the desired result, the cause could be a protective field height that is too low or reflections from reflective metals or tools brought into the area. In this case the installation of the Safety Light Curtain must be checked by a specialist. If the cause cannot be clearly defined and remedied, the machine or system may not be used!

9.4 Cleaning the front screens

The front screens on the transmitters and receivers must be cleaned regularly depending on how dirty they are. A flashing 7-segment display with the protective field free (LED1 is green) indicates a "weak signal reception"; cleaning the front screen is then required. If cleaning the screens does not improve this, the range and alignment must be checked. We recommend using a mild cleanser for cleaning the Plexiglas front screens. The screens are resistant to diluted acids or alkalis and resistant to organic solvents within limits.

10 Troubleshooting

The following information is used for rapid troubleshooting in the event of a malfunction.

10.1 What do I do if an error occurs?

If the AOPD shows an error on the display, the machine must be stopped immediately and checked by an experienced technician. If it is determined that the error cannot be clearly defined and remedied, your local Leuze office and or the Leuze electronic hotline can assist.

10.2 Diagnostics

Operational malfunctions often have simple causes that you can remedy yourself. The following tables will help you do this.

10.2.1 SD4T Transmitter diagnostic

Symptom	Activity for removing errors
LED is not lit	Check supply voltage Check connecting cable Replace transmitter if necessary
LED1 is lit red continuously	Hardware error, replace transmitter
LED2 is lit red continuously	Transmitter in test mode Check test input, connect to 24 V DC

Table 10.2-1: Transmitter diagnostics

10.2.2 SD4R-E Receiver diagnostics

The receiver displays faults and errors with Fxx codes. All possible codes and corresponding activities are then performed.

Code	Cause/significance	Activity for removing errors
	LEDs and 7-segment displays are not lit	24 V DC supply voltage, check connecting cable, replace the receiver if necessary
F4	Internal hardware fault	Send the device in
F6*	Short circuit between ground and OSSD1 or cross circuit	Remove short circuit between ground, overload or cross circuit; turn supply voltage off and on again
F7	OSSD short circuit after VCC or cross circuit, output 1	Remove short circuit after VCC or cross circuit; if it occurs again, send the device in
F8*	Short circuit between ground and OSSD2 or cross circuit	Remove short circuit between ground, overload or cross circuit; turn supply voltage off and on again

*) Locking error - a system reset is only achieved by switching the supply voltage off and on.

Code	Cause/significance	Activity for removing errors
F9	OSSD short circuit after VCC or cross circuit, output 2	Remove short circuit after VCC or cross circuit; if it occurs again, send the device in
F10	Undervoltage on power supply	Check power supply and feed
F20	Internal hardware fault	Send the device in
F21	Internal hardware fault	Send the device in
F22	Internal hardware fault	Send the device in
F23	Internal hardware fault	Send the device in
F24	Internal hardware fault	Send the device in
F25*	Different transmission channels discovered (during operation)	Switch supply voltage off and on again
F26*	Different evaluation procedures (SCAN) discovered (during operation)	Switch supply voltage off and on again
F27	Internal hardware fault	Send the device in
F28	Internal hardware fault	Send the device in
F29	Internal hardware fault	Send the device in
F30	Error in semiconductor test (timeout or multifuse)	Turn supply voltage off and on again; if it occurs again, send the device in
F32*	RES operating mode changed (during operation)	Switch supply voltage off and on again
F33*	EDM operating mode changed (during operation)	Switch supply voltage off and on again
F34*	EDM timeout exceeded (feedback circuit closes or will not open)	Check EDM wiring, turn supply voltage off and on again
F35*	Start/restart button pressed longer than 10 seconds	Check the start button wiring
F36	Test identification signal from transmitter longer than 3 seconds	Check transmitter test input
F37*	EDM configuration error	Check EDM wiring, turn supply voltage off and on again
F38	Internal hardware fault	Send the device in

*) Locking error - a system reset is only achieved by switching the supply voltage off and on.

Table 10.2-2: Receiver diagnostics

10.3 AutoReset

After an error or a fault has been detected and indicated, with the exception of the locking error/fault, a restart follows automatically

- in the transmitter after about 10 seconds and
- in the receiver after about 10 seconds.

for the device in question. If the error or fault is then no longer present, the machine/ application can be started again. The temporary error signal, however, is then lost.

*With locking errors (F6, F8, F10, F25, F26, F32, F33, F34, F35, F37 [conditional: F30]) the receiver is not automatically reset after 10 seconds. The receiver goes instead to the error locking status, from which it can **only** come out of by switching the supply voltage off and back on again.

11 Technical data

11.1 General data

11.1.1 Protective field data

Safety Light Curtain	Range		Physical resolution	Prot. field height	
	min.	max.		min.	max.
SD4-14	0.3 m	6 m	14 mm	150 mm	1,800 mm
SD4-20	0.7 m	14 m	20 mm	150 mm	1,800 mm
SD4-30	0.5 m	9 m	30 mm	150 mm	1,800 mm
SD4-40	0.9 m	20 m	40 mm	150 mm	1,800 mm
SD4-90	0.9 m	20 m	90 mm	600 mm	1,800 mm

Table 11.1-1: Beam and protective field data

11.1.2 Safety-relevant technical data

Type in accordance with IEC/EN 61496	Type 4
SIL in accordance with IEC 61508	SIL 3
SILCL in accordance with IEC/EN 62061	SILCL 3
Performance Level (PL) in accordance with ISO 13849-1: 2008	PL e
Category in accordance with ISO 13849	Cat. 4
Average probability of a failure to danger per hour (PFH_d) For protective field heights up to 900 mm, all resolutions For protective field heights up to 1800 mm, all resolutions For protective field heights up to 2850 mm, all resolutions	 6.0×10^{-9} $^1/_h$ 7.3×10^{-9} $^1/_h$ On request
Service life (T_M)	20 years

Table 11.1-2: Safety-relevant technical data

11.1.3 General system data

Supply voltage Uv Transmitter and receiver	24 V DC, ± 20 %, (SELV), equalization with a 20 ms voltage dip where required, at least 250 mA (plus OSSD load)
Residual ripple of supply voltage	±5 % within the limits of Uv
Transmitter power consumption	75 mA
Receiver power consumption	110 mA without external load
Shared value for external fuse in the supply line for Transmitter and Receiver	2 A melting fuse

*) Without additional measures the devices are not suited for outdoor use.

Table 11.1-3: General system data

Transmitter Class Wavelength Power	Light-emitting diodes in acc. with EN 60825-1:1994 + A1:2002 + A2:2001 1 950 nm < 50µW
Synchronization	Optical between transmitter and receiver
Safety class (IEC EN 61140):	III
Type of protection	IP65*
Ambient temperature, operation	0 ... 55 °C
Ambient temperature, storage	-25 ... 70 °C
Relative humidity	15 ... 95 %
Vibration fatigue limit	5 g, 10 - 55 Hz in acc. with IEC/EN 60068-2-6
Resistance to shock	10 g, 16 ms in acc. with IEC/EN 60068-2-29
Dimensions	See dimensional drawings and tables Chapter 11.2
Weight	See table, Chapter 11.2

*) Without additional measures the devices are not suited for outdoor use.

Table 11.1-3: General system data

11.1.4 SD4T Transmitter signal input

Pin4: Test input	Input: Contact or transistor against 24 V DC 0 V or free = test current load: 20 mA max.

Table 11.1-4: Transmitter, signal input

11.1.5 SD4R-E Receiver signal inputs/outputs

Pin1: Start/restart button Collective malfunction/ dirt signal	Input: Contact (normally open) against 24 V DC current load: 15 mA max. Output: pnp: Typical 22 V DC switching, max. 80 mA
Pin3: EDM (contactor monitoring) Without EDM	Input: Contacts (normally closed) against 0 V current load: 15 mA max. Connection to 24 V DC
Pin4: With RES Without RES	Input: 24 V DC Jumper to Pin1

Table 11.1-5: Receiver, machine interface, status and control signals

11.1.6 Safety-related transistor outputs

OSSDs safety switching outputs	**2 safety-related pnp semiconductor outputs, cross circuit monitored, resistant to short circuits**		
	Minimum	Typical	Maximum
Switching voltage high active (Uv – 1.6 V) with ohmic load $I_{nominal}$ = 250 mA Switching voltage low Switching current Leakage current Load capacity Load inductivity	- 80 V**)	+22 V DC 0 V 250 mA < 5 µA	 + 2.8 V < 20 µA < 220 nF < 2 H
Permissible wire resistance for load			< 300 Ω*)
Permissible cable length between receiver and load (at 0.25 mm²)			100 m
Test pulse width	30 µs		100 µs
Test pulse distance			22 ms
OSSD restart time after beam interruption	40 ms	100 ms	
OSSD response time	See tables, Chapter 11.2		

*) Note the additional restrictions caused by cable length and load current.
**) Fast de-excitation voltage with contactors, otherwise 0 V

Table 11.1-6: Receiver, machine interface, safety related transistor outputs

Note!

The output transistors perform the spark extinction. With transistor outputs, it is therefore not necessary to use the spark extinction elements recommended by contactor/valve manufacturers etc. (RC modules, varistors or recovery diodes). These extend the delay times of inductive switching elements.

11.2 Safety Light Curtain/host dimensions, weights, response times

Type	Dim. [mm]		Weight [kg]	Response time [ms]				
	Dim. A	Dim. B	SD4T/ SD4R	SD4-14	SD4-20	SD4-30	SD4-40	SD4-90
SD4*trrv*-150	150	225.5	0.3	7	11	6	6	
SD4*trrv*-225	225	300.5	0.4		9	9	9	
SD4*trrv*-300	300	375.5	0.4	13	11	11	11	
SD4*trrv*-450	450	525.5	0.6	10	9	9	9	
SD4*trrv*-600	600	675.5	0.7	13	11	11	11	8
SD4*trrv*-750	750	825.5	0.9	17	13	13	13	9
SD4*trrv*-900	900	975.5	1.0	20	16	9	9	11
SD4*trrv*-1050	1050	1125.5	1.2	23	18	10	10	7
SD4*trrv*-1200	1200	1275.5	1.3	26	21	11	11	8
SD4*trrv*-1350	1350	1425.5	1.5	29	23	12	12	9
SD4*trrv*-1500	1500	1575.5	1.6	32	26	13	13	9
SD4*trrv*-1650	1650	1725.5	1.8	35	28	15	15	10
SD4*trrv*-1800	1800	1875.5	1.9	38	31	16	16	11

Table 11.2-1: Safety Light Curtains host, dimensions and response times

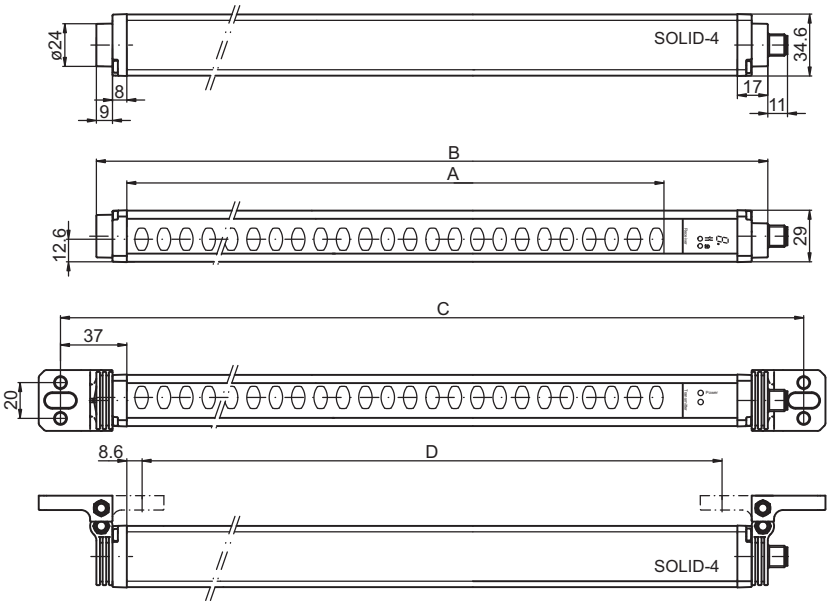

A = Prot. field height B = Total without plug

Fig. 11.2-1: Transmitter, receiver dimensions

11.3 Safety Light Curtain/guest dimensions, weights, response times

Type	Prot. field height [mm]	Weight SDT-..G SDR-..G [kg]	Response time [ms]				
		SD4T/SD4R	SD4-14	SD4-20	SD4-30	SD4-40	SD4-90
SD4*trrv*-150G	150	0.3	7	11	6	6	
SD4*trrv*-225G	225	0.4		9	9	9	
SD4*trrv*-300G	300	0.4	13	11	11	11	
SD4*trrv*-450G	450	0.6	10	9	9	9	
SD4*trrv*-600G	600	0.7	13	11	11	11	8
SD4*trrv*-750G	750	0.9	17	13	13	13	9
SD4*trrv*-900G	900	1.0	20	16	9	9	11
SD4*trrv*-1050G	1050	1.2	23	18	10	10	7
SD4*trrv*-1200G	1200	1.3	26	21	11	11	8
SD4*trrv*-1350G	1350	1.5	29	23	12	12	9
SD4*trrv*-1500G	1500	1.6	32	26	13	13	9
SD4*trrv*-1650G	1650	1.8	35	28	15	15	10
SD4*trrv*-1800G	1800	1.9	38	31	16	16	11

11.4 Number of beams for host / guest devices

Type	Number of beams				
	SD4-14	SD4-20	SD4-30	SD4-40	SD4-90
SD4*trrv*-150	15	12	6	6	
SD4*trrv*-225		18	9	9	
SD4*trrv*-300	30	24	12	12	
SD4*trrv*-450	45	36	18	18	
SD4*trrv*-600	60	48	24	24	8
SD4*trrv*-750	75	60	30	30	10
SD4*trrv*-900	90	72	36	36	12
SD4*trrv*-1050	105	84	42	42	14
SD4*trrv*-1200	120	96	48	48	16
SD4*trrv*-1350	135	108	54	54	18
SD4*trrv*-1500	150	120	60	60	20
SD4*trrv*-1650	165	132	66	66	22
SD4*trrv*-1800	180	144	72	72	24

Table 11.4-1: Number of beams for host / guest devices

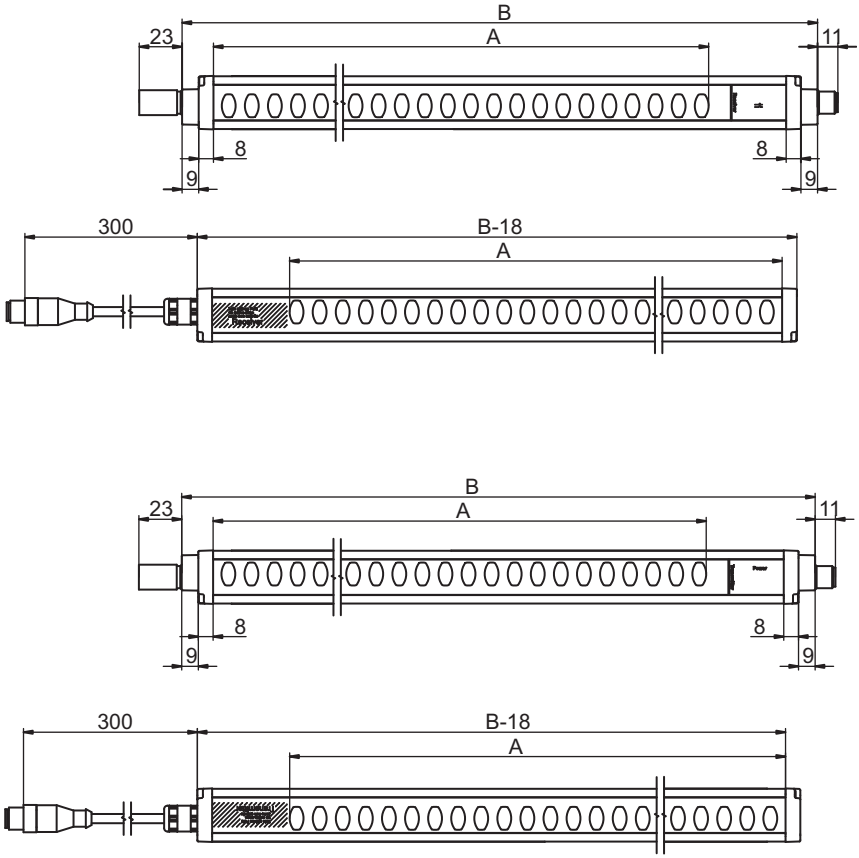

Fig. 11.4-1: Host-guest cascade

11.5 Bracket dimensions

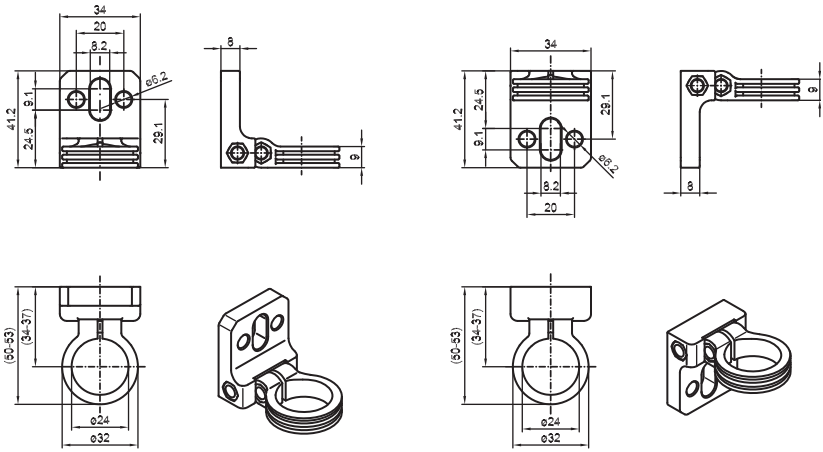

Fig. 11.5-1: Bracket, 360° rotation

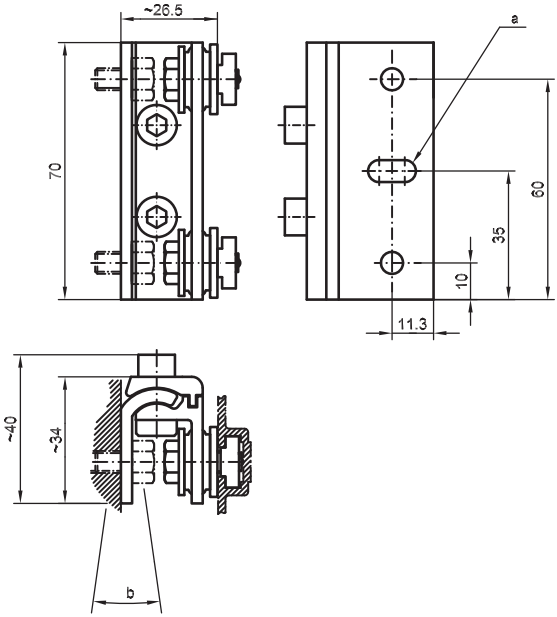

a = Slot 13 x 6
b = Swiveling angle ± 8°

Fig. 11.5-2: Option: Swiveling mounting bracket with shock absorber

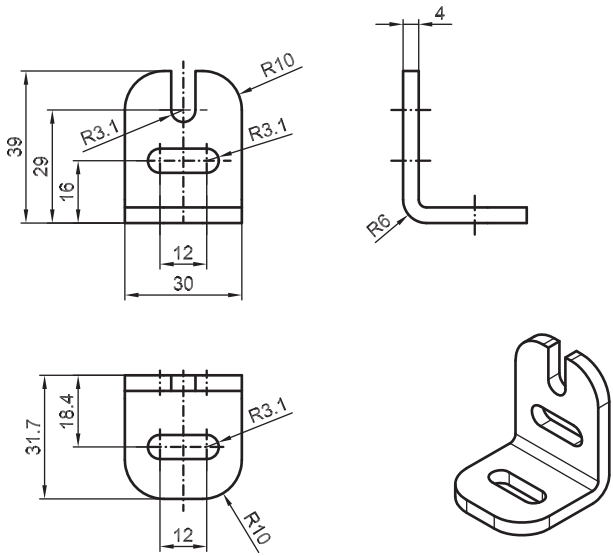

Fig. 11.5-3: Option: L-mounting bracket

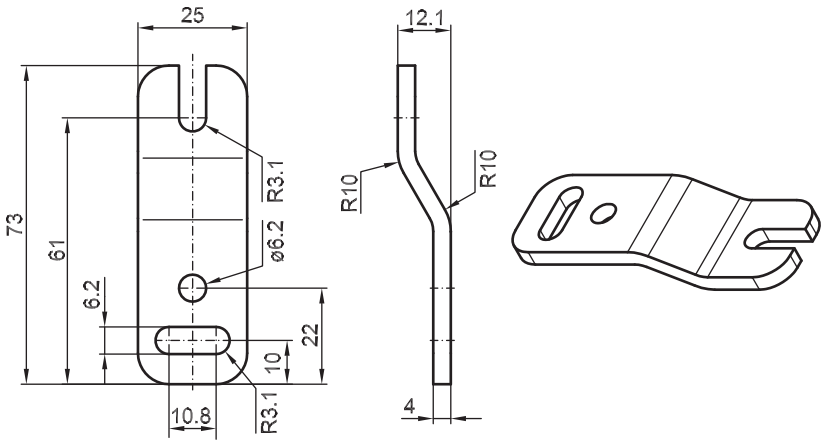

Fig. 11.5-4: Option: Z-mounting bracket

12 Appendix

12.1 SOLID-4 scope of delivery

SOLID-4 Safety Light Curtains are delivered with:

- 1 SD4T Transmitter unit
- 1 SD4R Receiver unit
- 4 brackets, 360° rotation
- 1 connecting and operating instructions manual

Also delivered for the series SD4 14, SD4 20, SD4 30 and SD4 40:

- 1 test rod AC-TB14/30 (SD4 14/30), AC-TB20 (SD4 20) or AC-TB40 (SD4 40)

12.2 SOLID-4 ordering information

Transmitter SD4T	**SD4T-14**	**SD4T-20**	**SD4T-30**	**SD4T-40**	**SD4T-90**
SD4Txx-150	67843501	67841701	67841801	67841901	
SD4Txx-225		67841702	67841802	67841902	
SD4Txx-300	67843503	67841703	67841803	67841903	
SD4Txx-450	67843504	67841704	67841804	67841904	
SD4Txx-600	67843506	67841706	67841806	67841906	67842006
SD4Txx-750	67843507	67841707	67841807	67841907	67842007
SD4Txx-900	67843509	67841709	67841809	67841909	67842009
SD4Txx-1050	67843510	67841710	67841810	67841910	67842010
SD4Txx-1200	67843512	67841712	67841812	67841912	67842012
SD4Txx-1350	67843513	67841713	67841813	67841913	67842013
SD4Txx-1500	67843515	67841715	67841815	67841915	67842015
SD4Txx-1650	67843516	67841716	67841816	67841916	67842016
SD4Txx-1800	67843518	67841718	67841818	67841918	67842018
Receiver SD4R-E	**SD4R-14**	**SD4R-20**	**SD4R-30**	**SD4R-40**	**SD4R-90**
SD4Rxx-150E	67843401	67840401	67840801	67841201	
SD4Rxx-225E		67840402	67840802	67841202	
SD4Rxx-300E	67843403	67840403	67840803	67841203	
SD4Rxx-450E	67843404	67840404	67840804	67841204	
SD4Rxx-600E	67843406	67840406	67840806	67841206	67841606
SD4Rxx-750E	67843407	67840407	67840807	67841207	67841607
SD4Rxx-900E	67843409	67840409	67840809	67841209	67841609
SD4Rxx-1050E	67843410	67840410	67840810	67841210	67841610
SD4Rxx-1200E	67843412	67840412	67840812	67841212	67841612
SD4Rxx-1350E	67843413	67840413	67840813	67841213	67841613
SD4Rxx-1500E	67843415	67840415	67840815	67841215	67841615
SD4Rxx-1650E	67843416	67840416	67840816	67841216	67841616
SD4Rxx-1800E	67843418	67840418	67840818	67841218	67841618

Receiver SD4R	SD4R-14	SD4R-20	SD4R-30	SD4R-40	SD4R-90
SD4Rxx-150	67843201	67840201	67840601	67841001	
SD4Rxx-225		67840202	67840602	67841002	
SD4Rxx-300	67843203	67840203	67840603	67841003	
SD4Rxx-450	67843204	67840204	67840604	67841004	
SD4Rxx-600	67843206	67840206	67840606	67841006	67841406
SD4Rxx-750	67843207	67840207	67840607	67841007	67841407
SD4Rxx-900	67843209	67840209	67840609	67841009	67841409
SD4Rxx-1050	67843210	67840210	67840610	67841010	67841410
SD4Rxx-1200	67843212	67840212	67840612	67841012	67841412
SD4Rxx-1350	67843213	67840213	67840613	67841013	67841413
SD4Rxx-1500	67843215	67840215	67840615	67841015	67841415
SD4Rxx-1650	67843216	67840216	67840616	67841016	67841416
SD4Rxx-1800	67843218	67840218	67840618	67841018	67841418

12.2.1 SOLID-4E Host ordering information

Transmitter SD4T-H	SD4T-14	SD4T-20	SD4T-30	SD4T-40	SD4T-90
SD4Txx-300H	67845003	67845103	67845203	67845303	67845403
SD4Txx-450H	67845004	67845104	67845204	67845304	67845404
SD4Txx-600H	67845006	67845106	67845206	67845306	67845406
SD4Txx-750H	67845007	67845107	67845207	67845307	67845407
SD4Txx-900H	67845009	67845109	67845209	67845309	67845409
SD4Txx-1050H	67845010	67845110	67845210	67845310	67845410
SD4Txx-1200H	67845012	67845112	67845212	67845312	67845412
SD4Txx-1350H	67845013	67845113	67845213	67845313	67845413
SD4Txx-1500H	67845015	67845115	67845215	67845315	67845415
SD4Txx-1650H	67845016	67845116	67845216	67845316	67845416
SD4Txx-1800H	67845018	67845118	67845218	67845318	67845418
Receiver SD4R-EH	**SD4R-14**	**SD4R-20**	**SD4R-30**	**SD4R-40**	**SD4R-H-90**
SD4Rxx-300EH	67844103	67844303	67844503	67844703	67844903
SD4Rxx-450EH	67844104	67844304	67844504	67844704	67844904
SD4Rxx-600EH	67844106	67844306	67844506	67844706	67844906
SD4Rxx-750EH	67844107	67844307	67844507	67844707	67844907
SD4Rxx-900EH	67844109	67844309	67844509	67844709	67844909
SD4Rxx-1050EH	67844110	67844310	67844510	67844710	67844910
SD4Rxx-1200EH	67844112	67844312	67844512	67844712	67844912
SD4Rxx-1350EH	67844113	67844313	67844513	67844713	67844913
SD4Rxx-1500EH	67844115	67844315	67844515	67844715	67844915
SD4Rxx-1650EH	67844116	67844316	67844516	67844716	67844916
SD4Rxx-1800EH	67844118	67844318	67844518	67844718	67844918

12.2.2 SOLID-4 Guest ordering information

Transmitter	SD4T-14	SD4T-20	SD4T-30	SD4T-40	SD4T-90
SD4Txx-150G	67847001	67847101	67847201	67847301	67847401
SD4Txx-225G		67847102	67847202	67847302	67847402
SD4Txx-300G	67847003	67847103	67847203	67847303	67847403
SD4Txx-450G	67847004	67847104	67847204	67847304	67847404
SD4Txx-600G	67847006	67847106	67847206	67847306	67847406
SD4Txx-750G	67847007	67847107	67847207	67847307	67847407
SD4Txx-900G	67847009	67847109	67847209	67847309	67847409
SD4Txx-1050G	67847010	67847110	67847210	67847310	67847410
SD4Txx-1200G	67847012	67847112	67847212	67847312	67847412
SD4Txx-1350G	67847013	67847113	67847213	67847313	67847413
SD4Txx-1500G	67847015	67847115	67847215	67847315	67847415
SD4Txx-1650G	67847016	67847116	67847216	67847316	67847416
SD4Txx-1800G	67847018	67847118	67847218	67847318	67847418
Receiver	**SD4R-14**	**SD4R-20**	**SD4R-30**	**SD4R-40**	**SD4R-90**
SD4Rxx-150G	67846001	67846201	67846401	67846601	67846801
SD4Rxx-225G		67846202	67846402	67846602	67846802
SD4Rxx-300G	67846003	67846203	67846403	67846603	67846803
SD4Rxx-450G	67846004	67846204	67846404	67846604	67846804
SD4Rxx-600G	67846006	67846206	67846406	67846606	67846806
SD4Rxx-750G	67846007	67846207	67846407	67846607	67846807
SD4Rxx-900G	67846009	67846209	67846409	67846609	67846809
SD4Rxx-1050G	67846010	67846210	67846410	67846610	67846810
SD4Rxx-1200G	67846012	67846212	67846412	67846612	67846812
SD4Rxx-1350G	67846013	67846213	67846413	67846613	67846813
SD4Rxx-1500G	67846015	67846215	67846415	67846615	67846815
SD4Rxx-1650G	67846016	67846216	67846416	67846616	67846816
SD4Rxx-1800G	67846018	67846218	67846418	67846618	67846818

Device variants with fixed-connected L and U-shape on request.

12.3 SOLID-4 accessories ordering information

Article no.	Article	Description
429050	BT-360°	Bracket, 360° rotation
429055	BT-360°-SET	Mounting bracket set, consisting of 2 BT-360°
429051	BT-L	L-mounting bracket
429052	BT-Z	Z-mounting bracket
429056	BT-L-mounting set	Consisting of 2 L-type mounting brackets
429057	BT-Z-mounting set	Consisting of 2 Z-mounting brackets
560300	BT-SSD	Mounting bracket, swiveling with shock absorber incl. 2 screws and 2 sliding nuts
Connecting cable, 5-pin for transmitter		
429071	CB-M12-5000S-5GF	Connecting cable shielded with M12 coupling, straight, 5 m long
429072	CB-M12-5000S-5WF	Connecting cable shielded with M12 coupling, angled, 5 m long
429073	CB-M12-10000S-5GF	Connecting cable shielded with M12 coupling, straight, 10 m long
429074	CB-M12-10000S-5WF	Connecting cable shielded with M12 coupling, angled, 10 m long
429075	CB-M12-15000S-5GF	Connecting cable shielded with M12 coupling, straight, 15 m long
429076	CB-M12-15000S-5WF	Connecting cable shielded with M12 coupling, angled, 15 m long
429171	CB-M12-25000S-5GF	Connecting cable, shielded with M12 coupling, 5-pin, 25 m, straight/open end
429172	CB-M12-25000S-5WF	Connecting cable, shielded with M12 coupling, 5-pin, 25 m, angled/open end
Connecting cable, 8-wire for SD4R-E Receiver		
429081	CB-M12-5000S-8GF	Connecting cable shielded with M12 coupling, straight, 5 m long
429082	CB-M12-5000S-8WF	Connecting cable shielded with M12 coupling, angled, 5 m long
429083	CB-M12-10000S-8GF	Connecting cable shielded with M12 coupling, straight, 10 m long
429084	CB-M12-10000S-8WF	Connecting cable shielded with M12 coupling, angled, 10 m long
429085	CB-M12-15000S-8GF	Connecting cable shielded with M12 coupling, straight, 15 m long
429086	CB-M12-15000S-8WF	Connecting cable shielded with M12 coupling, angled, 15 m long
429181	CB-M12-25000S-8GF	Connecting cable, shielded with M12 coupling, 8-pin, 25 m, straight/open end
429182	CB-M12-25000S-8WF	Connecting cable, shielded with M12 coupling, 8-pin, 25 m, angled/open end

Article no.	Article	Description
Host terminating plug		
426122	AC-H-END	Terminating plug set for SOLID-4E Host, Transmitter and Receiver
Protective Screens		
346803	PS-SD-300	Protective Screen, 300 mm, 341.5 mm long
346804	PS-SD-450	Protective Screen, 450 mm, 491.5 mm long
346806	PS-SD-600	Protective Screen, 600 mm, 641.5 mm long
346807	PS-SD-750	Protective Screen, 750 mm, 791.5 mm long
346809	PS-SD-900	Protective Screen, 900 mm, 941.5 mm long
346810	PS-SD-1050	Protective Screen, 1,050 mm, 1,091.5 mm long
346812	PS-SD-1200	Protective Screen, 1,200 mm, 1,241.5 mm long
346813	PS-SD-1350	Protective Screen, 1,350 mm, 1,391.5 mm long
346815	PS-SD-1500	Protective Screen, 1,500 mm, 1,541.5 mm long
346816	PS-SD-1650	Protective Screen, 1,650 mm, 1,691.5 mm long
346818	PS-SD-1800	Protective Screen, 1,800 mm, 1,841.5 mm long
429042	AC-PS-MB-SD-1 Set	Mounting bracket consisting of two brackets, suitable for lengths 300 mm - 1,050 mm
429043	AC-PS-MB-SD-2 Set	Mounting bracket consisting of three brackets, suitable for lengths 1,200 mm - 1,800 mm
Power Supplies		
520060	SITOPpower	Power supply, 120/230 V AC →24 V DC/5 A, regulated
520061	LOGO! power	Power supply, 120/230 V AC →24 V DC/1.3 A, regulated
Test Rods		
349945	AC-TB14/30	Test Rod, 14 mm/30 mm
349557	AC-TB40	Test Rod, 40 mm
Safety Relays		
549918	MSI-RM2	Relay module, two-channel, for AOPDs with 2 OSSDs and EDM
549986	MSI-SR4	E-STOP switching device, cat. 4

Article no.	Article	Description
Safety Interfaces		
549900	MSI-s/R	Type 4 safety interface, relay output
549901	MSI-sx/Rx	Type 4 safety interface, extended, relay-output
549902	MSI-i/R	Type 4 safety interface, cycle control, relayoutput
549903	MSI-ix/Rx	Type 4 safety interface, cycle control, extended, relay output
549904	MSI-m/R	Type 4 safety interface, muting, relay-output
549980	MSI-mE/R	Type 4 safety interface, muting, relay output, UL/CSA, ext. temperature range, 60 °C
549905	MSI-mx/Rx	Type 4 safety interface, muting, extended, relay output
549982	MSI-mxE/Rx	Type 4 safety interface, muting, extended, relay output, UL/CSA, ext. temperature range, 60 °C
549906	MSI-mi/R	Type 4 safety interface, muting and cycle control, relay output
549907	MSI-mix/Rx	Type 4 safety interface, muting and cycle control, extended, relay output

12.4 Checklists

The inspection before first startup determines the safety-related flawless integration of the active opto-electronic protective device (AOPD) into the machine and its control system. The results of the inspection must be recorded in writing and kept with the machine documents. They can then be used as a reference during subsequent regular inspections.

12.4.1 Checklist for point of operation guarding

For a SOLID-4 Safety Light Curtain (resolution 14 mm to 40 mm), with normal approach to the protective field.

This checklist is intended as a help tool. It supports but does not replace the inspection before first startup or the respective regular inspections by an expert.

- Is the safety distance calculated in accordance with the valid formulas for point of operation guarding, while taking the effective resolution and the response time of the AOPD, the response time of a possibly used safety interface and the stopping time of the machine into consideration, and has this minimum distance between the protective field and the point of operation been observed? Yes No
- Is access to the point of operation only possible through the protective field of the AOPD and are other possible accesses protected by suitable safety components? Yes No
- Is the protective field effective at each side and positively tested according to Chapter 9.3? Yes No
- Is reaching-over, reaching-under or reaching-around the protective field effectively prevented, e.g. by mechanical measures (welded or screwed)? Yes No
- Is unprotected presence between the protective field and point of operation safely excluded, e.g. with fixed physical measures or with the control of monitored physical components? Yes No
- Are transmitter and receiver fixed against displacement/turning after the alignment? Yes No
- Are the protective device and the control devices in good, fault-free condition? Yes No
- Are all connectors and connecting cables in fault-free conditions? Yes No
- Is the start/restart button for resetting the AOPD positioned outside the danger zone in line with specifications and is it effective? Yes No
- Are the safety switching outputs (OSSDs), linked into the downstream machine control unit in accordance with the required safety category? Yes No
- Are the downstream circuit elements controlled by the AOPD monitored by the feedback circuit (EDM), e.g. contactors with positive-guided contacts or safety valves? Yes No
- Does the actual integration of the AOPD into the machine control unit match the circuit diagrams? Yes No
- Is the AOPD effective during the entire dangerous movement of the machine? Yes No
- Is the dangerous movement stopped immediately if the supply voltage of the AOPD is interrupted and is the start/restart button required to start the machine again after the supply voltage returns? Yes No

12.4.2 Checklist for danger zone guarding

For a SOLID-4 Safety Light Curtain with parallel approach to the protective field

This checklist is intended as a help tool. It supports but does not replace the inspection before first startup or the respective regular inspections by an expert.

• The minimum height of the protective field above the reference plane relates to the resolution of the AOPD. Was the resolution used when calculating the minimum height and is this height ensured?	Yes	No
• Is the safety distance calculated in accordance with the applicable formulas for danger zone guarding and is this minimum distance between the most distant effective beam and the point of operation observed?	Yes	No
• During risk assessment, has it been ensured that only protective field heights less than 300 mm above the floor are regarded as low enough not to be crawled under (EN 999)?	Yes	No
• Is the access to the point of operation only possible through the protective field of the AOPD and are other access possibilities, especially from the sides, protected by suitable hard guards or other means?	Yes	No
• Is unprotected presence between the next beam and the point of operation definitively excluded?	Yes	No
• Are transmitter and receiver fixed against displacement/turning after the alignment?	Yes	No
• Are the protective device and the control devices in good, fault-free condition?	Yes	No
• Are all connectors and connecting cables in fault-free conditions?	Yes	No
• Is the start/restart button for starting/restarting the AOPD positioned outside the danger zone and is it effective?	Yes	No
• Are the safety outputs (OSSDs) linked into the downstream machine control unit in accordance with the required safety category?	Yes	No
• Are the downstream circuit elements controlled by the AOPD monitored by the feedback circuit (EDM), e.g. contactors with positive-guided contacts or safety valves?	Yes	No
• Does the actual integration of the AOPD into the machine control unit match the circuit diagrams?	Yes	No
• Is the AOPD effective during the entire dangerous movement of the machine?	Yes	No
• Does the dangerous movement stop immediately if the supply voltage of the AOPD is interrupted and is the start/restart button required to reset the machine again after the supply voltage returns?	Yes	No

12.4.3 Checklist for access guarding

For a SOLID-4 Safety Light Curtain with normal approach to the protective field

This checklist is intended as a help tool. It supports but does not replace the inspection before first startup or the respective regular inspections by an expert.

- Has the safety distance been calculated in accordance with the applicable regulations, and has this minimum distance between protective field and the point of operation been observed? Yes No
- Are the required beam heights of the lowest and the highest beam complied with (see Chapter 6.1.3)? Yes No
- If access to the point of operation is possible through routes other than the protective field of the AOPD, are the other access options suitably secured by other means? Yes No
- Are the protective device and the control devices in good, fault-free condition? Yes No
- Are transmitter and receiver fixed against displacement/turning after the alignment? Yes No
- Are all connectors and connecting cables in fault-free conditions? Yes No
- Is the start/restart button for resetting the AOPD positioned outside of the danger zone in line with specifications so that it cannot be reached from inside? Is there a complete overview of the danger zone from the start/restart button position? Yes No
- Are both safety-related switching outputs (OSSDs) linked into the downstream machine control unit in accordance with the required safety category? Yes No
- Are the subsequent switching elements controlled by the AOPD, e.g. contactors with positive-guided contacts or safety valves monitored via the feedback circuit (EDM)? Yes No
- Does the actual integration of the AOPD into the machine control unit match the circuit diagrams? Yes No
- Does the AOPD respond correctly when any beam is interrupted and does the start/restart interlock lock when the beam is interrupted? This is absolutely necessary, as the access, not the presence in the danger zone is recorded. Yes No
- Does the dangerous movement stop immediately if the supply voltage of the AOPD is interrupted and is the start/restart button required to reset the optoelectronic protective device again after the supply voltage returns? Yes No

12.5 EC Declaration of Conformity

EG-KONFORMITÄTS-ERKLÄRUNG	EC DECLARATION OF CONFORMITY	DECLARATION CE DE CONFORMITE
Der Hersteller	The Manufacturer	Le constructeur
	Leuze electronic GmbH + Co. KG In der Braike 1, PO Box 1111 73277 Owen, Germany	
erklärt, dass die nachfolgend aufgeführten Produkte den einschlägigen Anforderungen der genannten EG-Richtlinien und Normen entsprechen.	declares that the following listed products fulfil the relevant provisions of the mentioned EC Directives and standards.	déclare que les produits identifiés suivants sont conformes aux directives CE et normes mentionnées.
Produktbeschreibung:	Description of product:	Description de produit:
Sicherheits- Lichtvorhang, Mehrstrahl-Sicherheits-Lichtschranke Berührungslos wirkende Schutzeinrichtung, Sicherheitsbauteil nach 2006/42/EG Anhang IV SOLID-4 Seriennummer siehe Typschild	**Safety Light Curtain, Multiple Light Beam Safety Device Active opto-electronic protective device, safety component in acc. with 2006/42/EC annex IV SOLID-4 Part No. see name plates**	**Barrière immatérielle de sécurité, Barrage immatériel multifaisceau de sécurité Èquipement de protection électro-sensible, Èlément de sécurité selon 2006/42/CE annexe IV SOLID-4 Art. n° voir plaques signalétiques**
Angewandte EG-Richtlinie(n):	Applied EC Directive(s):	Directive(s) CE appliquées:
2006/42/EG 2004/108/EG	**2006/42/EC 2004/108/EC**	**2006/42/CE 2004/108/CE**
Angewandte Normen:	Applied standards:	Normes appliquées:
EN 61496-1:2009; IEC 61496-2:2006; IEC 61508:1998 part 1,3,4 (SIL3); IEC 61508-2:2000 (SIL3) EN 55011/A2:2007; EN 50178:1997; EN ISO 13849-1: 2008 (Kat. 4, Ple)		
Benannte Stelle / Baumusterprüfbescheinigung:	Notified Body / Certificate of Type Examination:	Organisme notifié / Attestation d'examen CE de type:
TÜV-SÜD PRODUCT SERVICE GmbH Zertifizierungsstelle Ridlerstraße 65 D-80339 München	/	**Z10 09 12 22795 087**
Bevollmächtigter für die Zusammenstellung der technischen Unterlagen:	Authorized person to compile the technical file:	Personne autorisée à constituer le dossier technique:
Robert Sammer; Leuze electronic GmbH + Co. KG, business unit safety systems Liebigstr. 4; 82256 Fuerstenfeldbruck; Germany		

Owen, 20.4.10

Datum / Date / Date

Dr. Harald Grübel, Geschäftsführer / Director / Directeur

Leuze electronic GmbH + Co. KG
In der Braike 1
D-73277 Owen
Telefon +49 (0) 7021 573-0
Telefax +49 (0) 7021 573-199
info@leuze.de
www.leuze.com

LEO-ZQM-149-01-FO

Leuze electronic GmbH + Co. KG, Sitz Owen, Registergericht Stuttgart, HRA 230712
Persönlich haftende Gesellschafterin Leuze electronic Geschäftsführungs-GmbH, Sitz Owen, Registergericht Stuttgart, HRB 230550
Geschäftsführer: Dr. Harald Grübel (Vorsitzender), Karsten Just
USt.-IdNr. DE 145912521 | Zollnummer 2554232
Es gelten ausschließlich unsere aktuellen Verkaufs- und Lieferbedingungen
Only our current Terms and Conditions of Sale and Delivery shall apply

Nr. 609040-2010/04

You can download this EC Declaration of Conformity from the Internet under:
http://www.leuze.com/solid